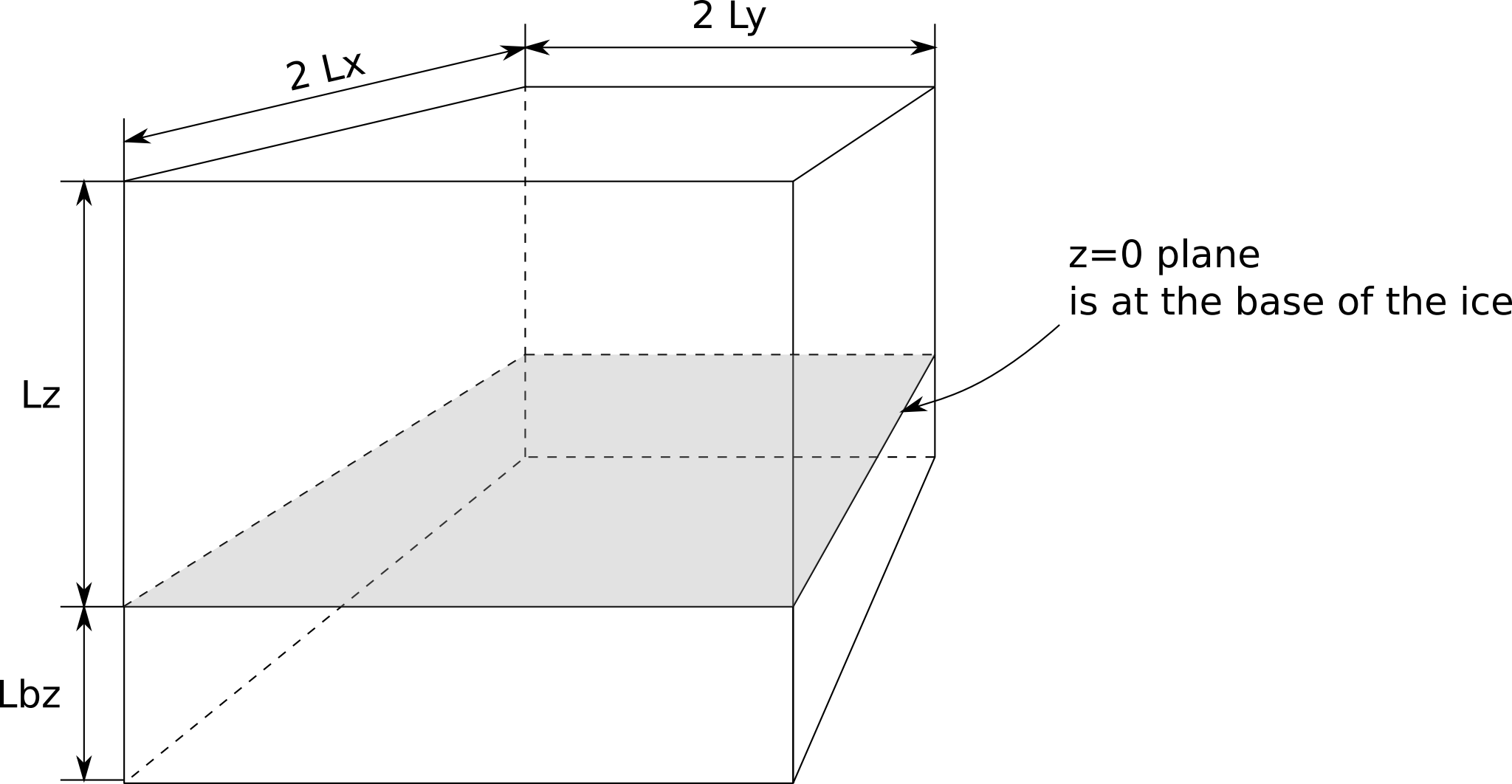
2 Ly
2 Lx
z=0 plane
is at the base of the ice
Lz
Lbz