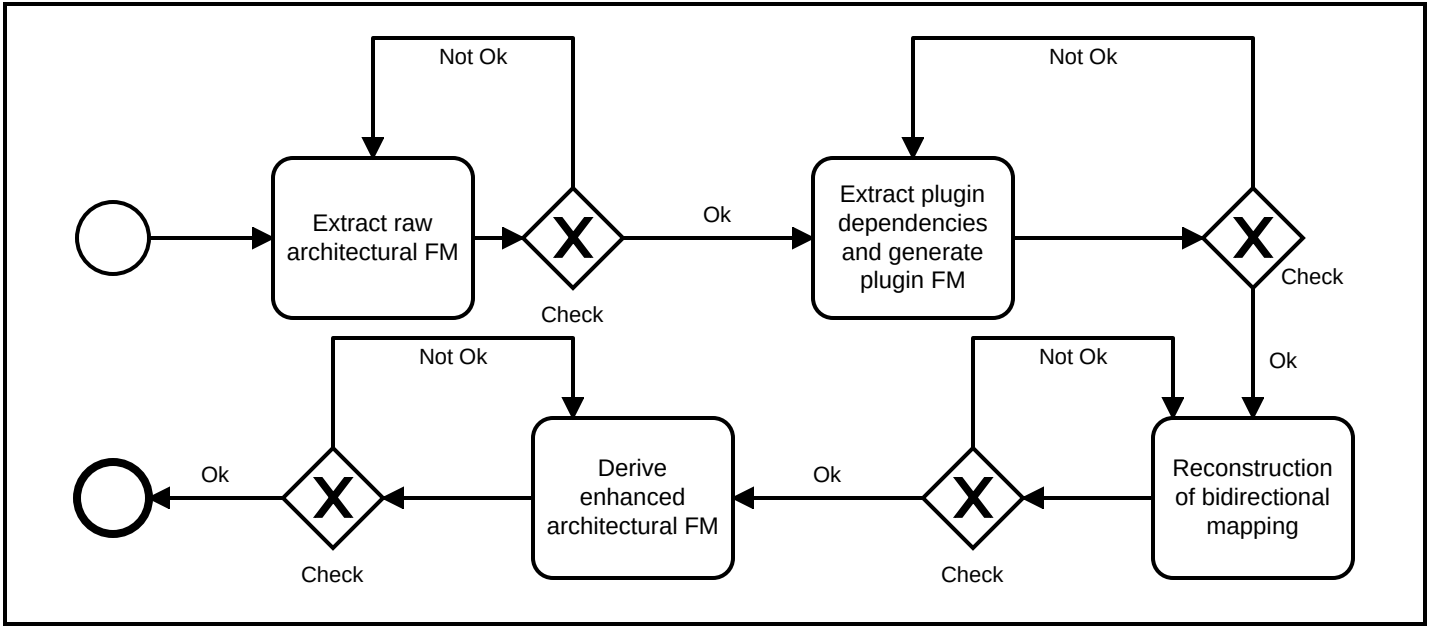
Not Ok
Extract raw architectural FM
Check
Ok
Not Ok
Extract plugin dependencies and generate plugin FM
Check
Ok
Not Ok
Reconstruction of bidirectional mapping
Check
Ok
Not Ok
Derive enhanced architectural FM
Check
Ok