Funded by
the European Union

CODECO
Cognitive Decentralised
Edge Cloud Orchestration

NETWORK MANAGEMENT AND ADAPTATION (NETMA)

Dr. Luis M. Contreras
Telefónica Innovación Digital (TID)

Funded by the European Union under Grant Agreement 101092696

NETWORK MANAGEMENT AND ADAPTATION (NETMA)

The NetMA component handles the automated setting up of the interconnections required for a flexible Edge-Cloud operation

- Satisfies the connectivity support across diverse network environments
- Allows a secure data exchange (i.e., flow isolation)
- Enables the analysis of predictive behaviour through the collection and processing of relevant networking KPIs
- Leverages on network softwarization, allowing the automated management and control of network resources according to service needs

Funded by
the European Union

NETMA INTERNALS

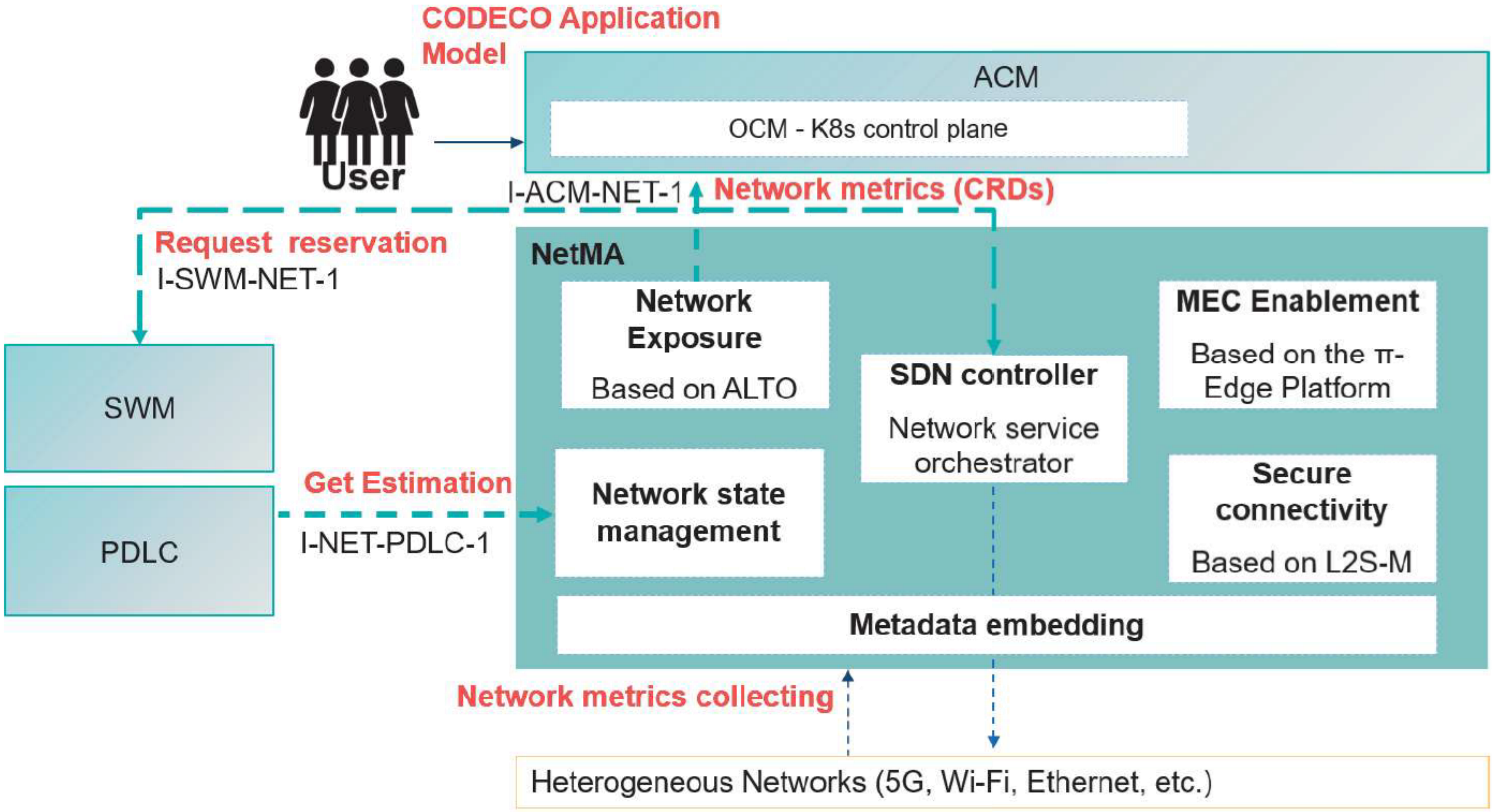
CODECO Application Model
User
ACM
OCM - K8s control plane
I-ACM-NET-1
Network metrics (CRDs)
Request reservation
I-SWM-NET-1
SWM
PDLC
Get Estimation
I-NET-PDLC-1
NetMA
Network Exposure
Based on ALTO
SDN controller
Network service orchestrator
MEC Enablement
Based on the π-Edge Platform
Network state management
Secure connectivity
Based on L2S-M
Metadata embedding
Network metrics collecting
Heterogeneous Networks (5G, Wi-Fi, Ethernet, etc.)

Funded by the European Union

CODECO

SECURE AND TAILORED CONNECTIVITY
LINK-LAYER SECURE CONNECTIVITY FOR MICROSERVICE PLATFORMS (L2S-M)

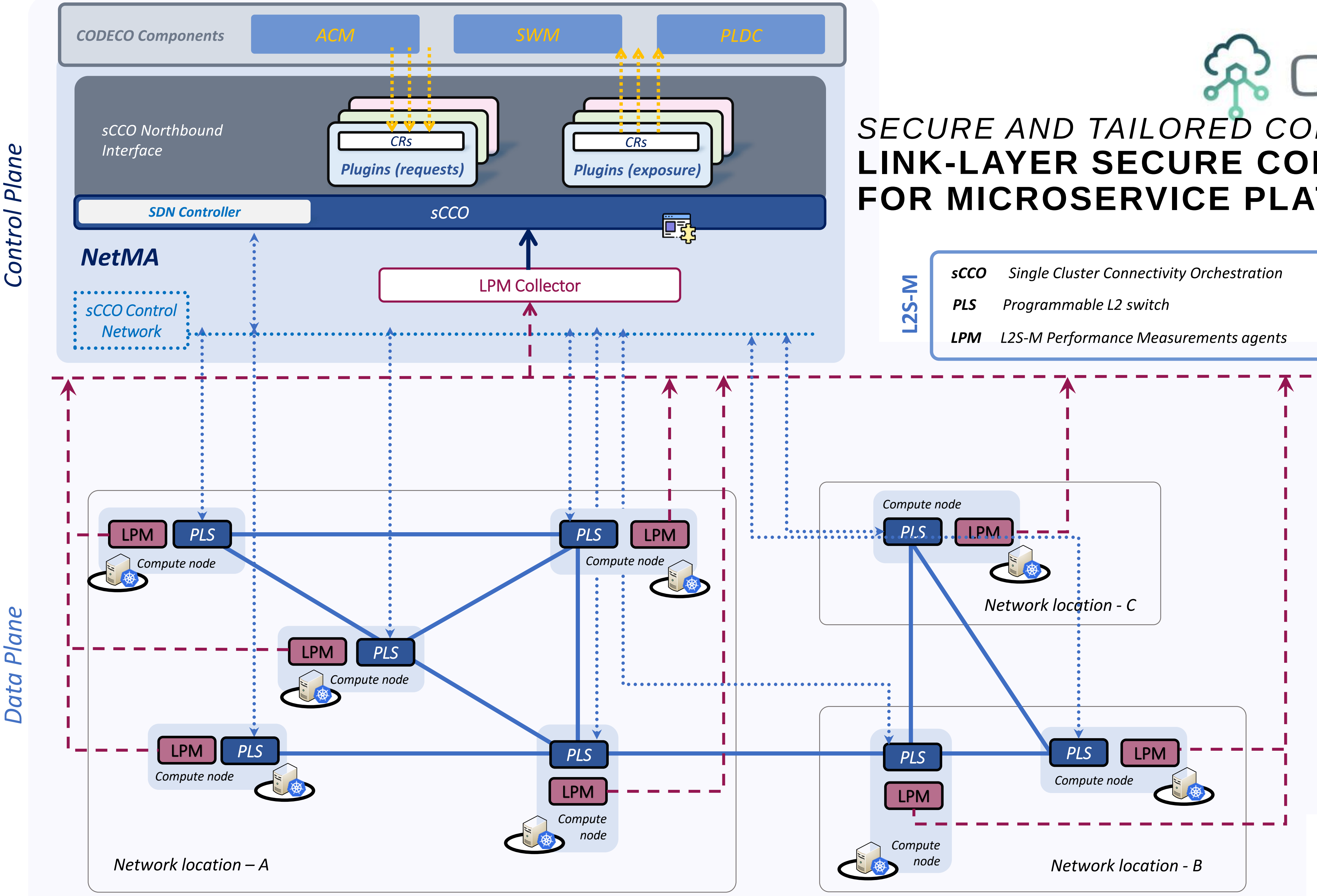
Control Plane
CODECO Components
ACM
SWM
PLDC
sCCO Northbound Interface
CRs
Plugins (requests)
CRs
Plugins (exposure)
SDN Controller
sCCO
NetMA
LPM Collector
sCCO Control Network
Data Plane
LPM
PLS
Compute node
Network location – A
Network location - B
Network location - C
L2S-M

sCCO	*Single Cluster Connectivity Orchestration*
PLS	*Programmable L2 switch*
LPM	*L2S-M Performance Measurements agents*

kubernetes

Prometheus

Open vSwitch

strongSwan

ONOS

** Compute nodes of a cluster may be distributed on different network locations*

CODECO

INTER-CLUSTER OPERATION
L2S-M AND ALTO COOPERATION

L2S-M

IDCO	*Inter-Domain Connectivity Orchestration*
NED	*Network Edge Device*

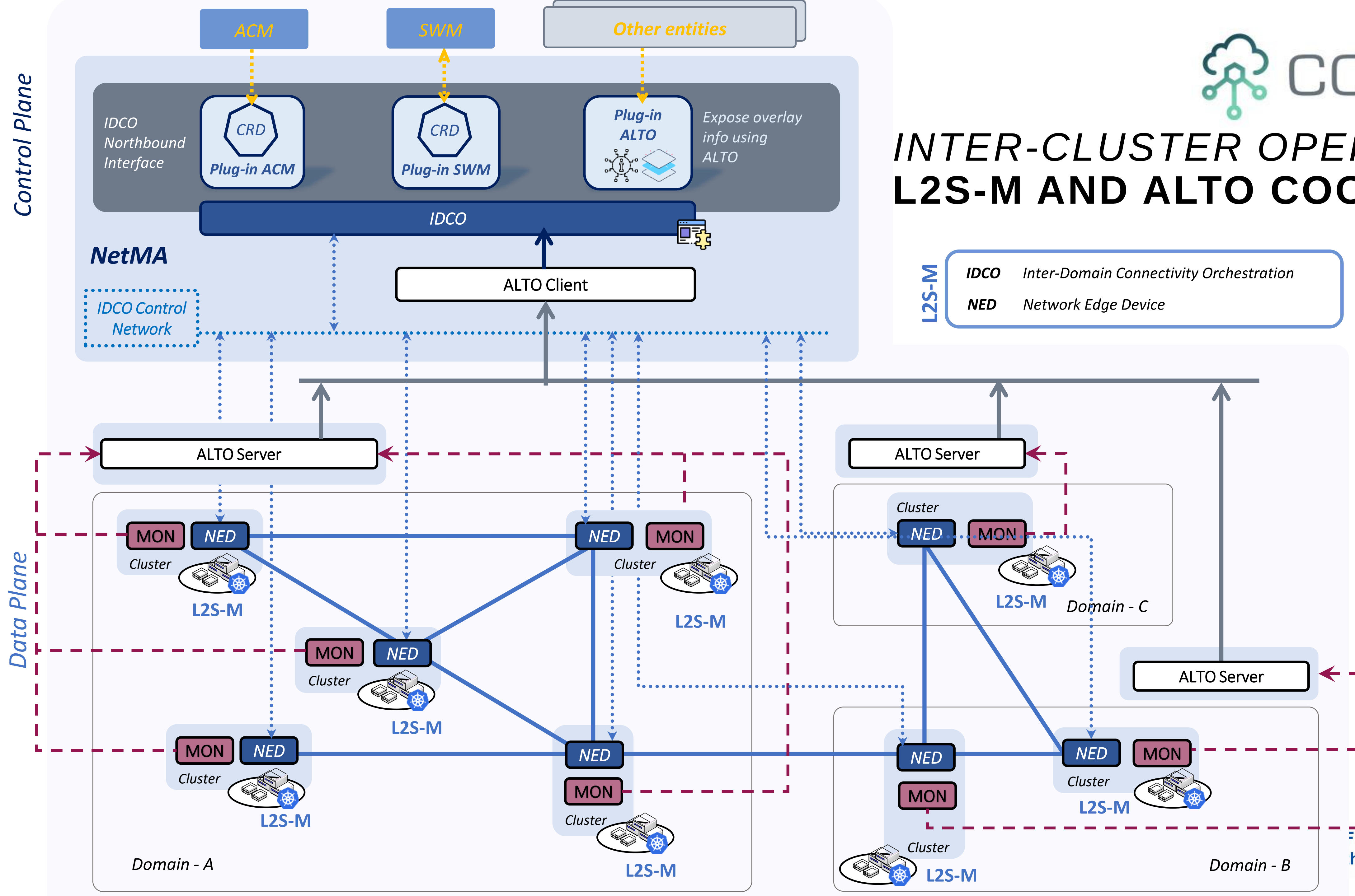

ACM
SWM
Other entities
Control Plane
IDCO Northbound Interface
CRD
Plug-in ACM
CRD
Plug-in SWM
Plug-in ALTO
Expose overlay info using ALTO
IDCO
NetMA
IDCO Control Network
ALTO Client
ALTO Server
ALTO Server
ALTO Server
Data Plane
MON
NED
Cluster
L2S-M
NED
MON
Cluster
L2S-M
MON
NED
Cluster
L2S-M
MON
NED
Cluster
L2S-M
NED
MON
Cluster
L2S-M
Domain - A
Cluster
NED
MON
L2S-M
Domain - C
NED
MON
Cluster
L2S-M
NED
MON
Cluster
L2S-M
Domain - B

kubernetes

Prometheus

Open vSwitch

strongSwan

ONOS
Open Network Operating System

Funded by
he European Union

EDGE EXPOSURE
MEC ENABLEMENT

- This sub-component brings to NetMA the possibility to integrate data derived from **far Edge devices** and **non-K8s systems**

  - Integration with the [ETSI Multi-Access Edge Computing (MEC) APIs]()

- **APIs/ functionalities offered:**
  - Query information about:
    - Distance from a user to a location or between two users
    - Info for a specific UE or a group of Ues
    - Info about one or more specific zones or a list of zones.
    - Info about available access points
  - Subscriptions:
    - Creates a subscription for distance change notification
    - Retrieves all active subscriptions to distance change notifications
    - Creates subscription to area notifications
    - Creates a subscription to zone notifications
    - Create subscription to UE location notifications

Workflow example activating MEC Enablement sub-component:

- **User Request via CODECO ACM:**
  - DEV requests application installation through CODECO ACM.
  - Includes MEC API preferences in the request.
- **Optimal Operational Environment:**
  - CODECO selects an operational environment (cluster, multi-cluster).
  - Distributes micro-services across Edge-Cloud continuum based on MEC APIs availability.
- **MEC API Utilization on Far Edge:**
  - Microservices on far Edge leverage requested MEC APIs.
  - MEC Platforms on near Edge nodes facilitate API usage.

Funded by the European Union

NETWORK STATUS
PROBING CAPABILITIES

- Metrics can be collected at different levels
  - At the overlay offered by L2S-M
    - Monitoring of the status of the overlay connections as experienced by the microservices being connected
  - At the underlay on the infrastructure supporting the overlay
    - Monitoring of metrics associated to the infrastructure (e.g. energy)
- Probes are software agents instantiated on demand

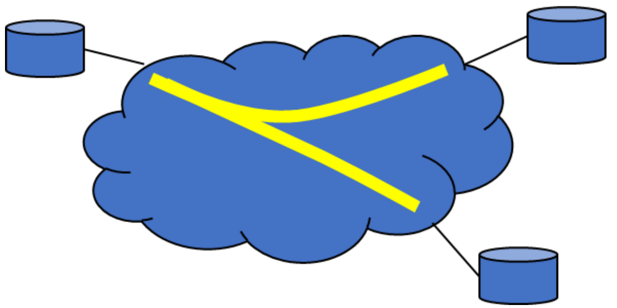

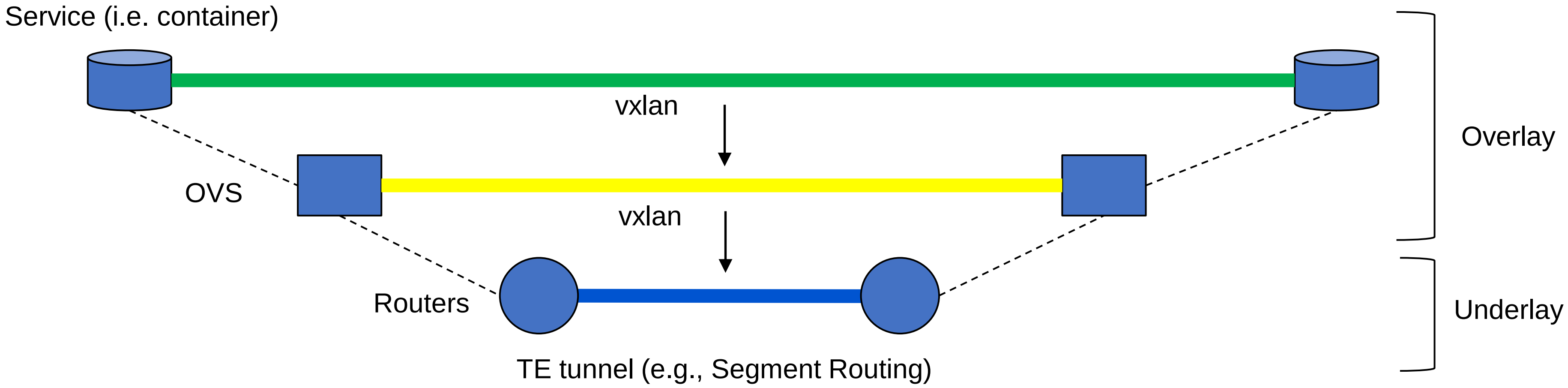
Service (i.e. container)
vxlan
OVS
vxlan
Routers
TE tunnel (e.g., Segment Routing)
Overlay
Underlay

Funded by
the European Union

- L2S-M video for demo

Funded by
the European Union