# Modifications to Improve the Performance of A Tricycle

***Manan Kumar Pal[1*], M.L.Jain[2]***
*[1]M. Tech Student, [2]Professor*
*[1,2]Department of Mechanical Engineering, Shri Govindram Seksariya Institute of Science and Technology, Indore, Madhya Pradesh, India*

**Corresponding Author*
*E-mail Id:- manan21pal@gmail.com*

***ABSTRACT***
*Freight tricycle are a common mode of load transportation/transfer in India especially in rural areas. As these vehicles are used in transportation/ transfer of large amount of loads, their design must be such that it does not fail while transportation/ transfer because in rural areas there are not much resource for repairing the damage. To avoid such problem we aim to improve the design of the freight that it does not fail and is able to transport a good amount of load, we achieve this goal using the CAD tools for designing and developing the vehicle. The designing is done using Siemen NX 10 and analysis is done on ANSYS 19.2.*

*Keyword: Freight Bicycle, Freight Tricycle and Tricycle Rickshaw*

## INTRODUCTION

Transportation is the development of merchandise and people from one spot to another and the different methods by which such development is refined. The development of the capacity—and the need—to ship enormous amounts of merchandise or quantities of individuals over significant distances at high rates in solace and wellbeing has been a record of civilization and specifically of innovative advancement. As such, the activity of transport is characterized as a specific development of a living being or thing from a point (a spot in space) to a point B. A method of transport is an answer that utilizes a specific kind of vehicle, framework, and activity. Cargo transport has gotten zeroed in on containerization, in spite of the fact that mass vehicle is utilized for enormous volumes of solid things.

Transport plays an important part in economic growth and globalization, but most types cause air pollution and use large amounts of land. Traffic clog, overconsumption of petroleum products and air contamination are altogether immediate aftereffects of car ways of life around the globe. The intelligent option is Human Powered Vehicles (HPVs) also known as Human Fuelled Vehicle , maybe best exemplified in the bike, the most essential HPV. The most common HPV is a bicycle.

A Bicycle also called a bike or a cycle is a human-powered or motor-powered, that can be pedal-driven, single-track vehicle, having two wheels attached to a frame, one behind the other. Bicycles were first introduced in the 19th century in Europe; they had wooden frame tyres of iron and/or wood. The fundamental shape and arrangement of an ordinary "bike", has changed little since the main chain-driven model was created around 1885 as shown in Figure 1. Nonetheless, numerous subtleties have been improved, particularly since the approach of current materials and PC supported plan. These have took into consideration a multiplication of particular plans for some kinds of cycling.

***Fig.1:-****Bicycle*
*(https://www.colourbox.com/image/old-bicycle-image-10231984)*

Cargo bikes are human fueled vehicles planned and built explicitly for moving products. The plan of the vehicle incorporate a freight region comprising of an open or encased box, a level stage, or a wire container, normally mounted more than one or the two wheels, low behind the front wheel, or between equal wheels at either the front or back of the vehicle as shown in Figure 2. The casing and drivetrain are built as to deal with loads bigger than those on a common bike.

***Fig.2:-****Freight Bicycle*
*(https://www.google.com/opac.gdctral.ac.in)*

**Tricycle [Figure 3]**

A tricycle, also known as a trike, is a human-powered three-wheeled vehicle. Some tricycles, such as cycle rickshaws (for passenger transport) and freight trikes, are used for commercial purposes, especially in the developing countries such as Africa and Asia. In the Western countries, adult-sized tricycles are used primarily for recreation, shopping, and exercise. Tricycles are favoured by children and senior adults because of their stability compared to a normal bicycle; however a conventional tricycle has poor dynamic lateral stability, and the rider must take care when cornering to avoid tipping the trike over. Alternative designs have a lower centre of gravity so require less caution.

A three-wheeled wheelchair was built in 1655 or 1680 by a disabled German man, Stephan Farffler, who wanted to be able to maintain his mobility. Since he was a watch-manufacturer, he was able to generate a vehicle that was driven by hand cranks. On May 8, 1888 in Washington D.C Matthew A. Cherry patented new inventions to the Velocipede which could carry up-to three persons.

In 1789, two French inventors developed a three-wheeled vehicle, powered by pedals; they called it the tricycle.
In 1818, British inventor Denis Johnson patented his approach to designing tricycles. In 1876, James Starley developed the Coventry Lever Tricycle, which used two small wheels on the right side and a large drive wheel on the left side; power was supplied by hand levers. In 1877, Starley developed a new vehicle he called the Coventry Rotary, which was "one of the first rotary chain drive tricycles." Starley's inventions started a tricycling craze in Britain; by 1879, there were "twenty types of tricycles and multi-wheel cycles ... produced in Coventry, England, and by 1884, there were over 120 different models produced by 20 manufacturers." The first front steering tricycle was manufactured in 1881 by The Leicester Safety Tricycle Company of Leicester, England, which was brought to the market in 1882 costing £18. They also developed a folding tricycle at the same time.

Tricycles were used by riders who did not feel comfortable on the high wheelers, such as women who wore long, flowing dresses.

***Fig.3:-****Tricycle (https://www.lowtechmagazine.com/2014/05/modular-cargo-cycles.html)*

**CLASSIFICATION OF TRICYCLE**

Classification on the basis of configuration of wheels

**Delta Tricycle [Figure 4]**

The "Delta" principle entails two rear wheels and one directional wheel at the front. This means that the rider is seated between the front and rear axle.

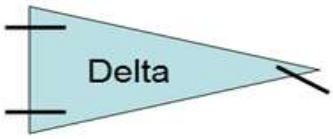


***Fig.4:-****Delta Configuration of Tricycle* (https://www.resna.org/sites/default/files/conference/2016/wheelchair_seating/gilapa.html)

**Tadpole Tricycle [Figure 5]**

Tadpole tricycle also known as Tadpole Trikes have two front wheels that steer. They have one rear wheel, which is driven by the pedals.

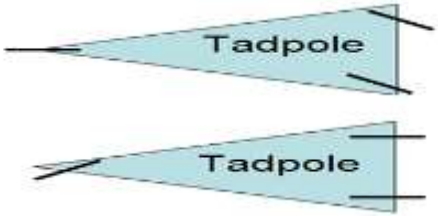


***Fig.5:-****Tadpole Configuration of Tricycle* (https://www.resna.org/sites/default/files/conference/2016/wheelchair_seating/gilapa.html)

Classification on the basis of Application

**Tricycle Rickshaw [Figure 6]**

A tricycle cart or Pedi taxi (referred to in different dialects as Cycle-Rickshaw) are a kind of tricycle utilized for conveying travelers, and once in a while additionally utilized for conveying little loads. They are for the most part recruited, by the travelers as a substitute of a taxi, yet are human-controlled, the work being finished by the driver. Cycle rickshaws often have a parasol or tent top to shield the riders from sun and storm. Cycle rickshaws are common in Asia and Africa. In the first decade of the 21st century, tricycle rickshaws became extensively popular in big cities like Britain, Europe and the United States, where they provide urban transportation, novelty rides, and serve as advertising media.

Nowadays in some developed cities they are banned, or banned from certain areas, as they are relatively slow and are blamed for slowing down traffic for long time.
Motorized Tricycle Rickshaws (including motorcycles with sidecar) also exist.

***Fig.6:-****Tricycle Rickshaw (https://in.pinterest.com/pin/724095064879525 06/)*

**Freight Tricycle [Figure 7]**

In urban areas delivery tricycles are constructed for transporting of large loads. These tricycles have a cargo area

consisting of a carrier made of steel tube, in the form of an open or enclosed box, a flat platform, or a large, heavy-duty wire basket. This carrier is mostly mounted over one or both wheels, between parallel wheels at either the front or rear of the vehicle or low behind the front wheel, to keep the center of gravity low. The drivetrain and the frame should be constructed in such a way that it can handle loads several times that of an ordinary bicycle. Other design specification include operator visibility and suspension of load. Most of the, cycles used for vending purposes of goods such as ice cream cart trikes or hot dog vending trikes are cargo bicycles. Freight tricycles are also designed for indoor use in industrial plants and large warehouses. The tricycles provide an advantage over motorized vehicle of not releasing exhaust which makes their use possible inside the warehouse as well.

***Fig.7:-****Freight Tricycle (https://www.turbosquid.com/3d-models/3d-model-loading-cycle-rickshaw/1133586)*

## LITERATURE REVIEW

Since the first bicycle\tricycle has been developed it has been very popular till date. Their approach of design and mechanism has been much developed over the years, the chain drive of the cycle has been developed ever since it first came into picture. There is much improvement in the overall design of the cycle. Many researches have been done over years to improve the efficiency and reduce the burden on human power to drive the cycle. This section covers researches done on cycle chain drive, modelling and analysis over the years.

Prof. S. U. Gunjal, Prof. G. D. Sonawane, Prof. S. P. Awate, Prof. D. R. Satpute [1] In this work we see a development of a substitute of cars and motorcycles being used for a short distance. The developed vehicle is a Very light hybrid vehicle that is human powered and can also be driven using an electrical driving system. The design of the vehicle is a mixture a bicycle and an electrical vehicle both used together in such a way that it results into a vehicle that is light-weight as well is an electrically driven vehicle. A new conceptual frame was designed for the project that has a straight ahead position which has a greater safety benefit over the conventional design also keeping the design simple enough as well. The newly developed contains only two members which makes the manufacturing of the vehicle much easy. The vehicle has seating capacity of two adults each of them can individually power the cycle using the foot pedals.

The modified vehicle also has a mechanical drive system which could on its own power the vehicle whenever required using the electrical power source at the rear side.

Kayode Oyindamola [2] In this survey we find methods for successful accumulation of urban waste management by structuring and developing a tricycle that has a strong carriage and is human-powered. The end goal of which was successfully gathering the waste material of the city areas and networks where the current accumulation trucks is not possible due to tight, low quality streets and a highly populated area with blocked path ways such markets.

Madeline R. Hickman [3] In this research we learn that an extra power source available in the rickshaw could go a far way in improving the easy of using the vehicle by the driver and the comfort. We also find that people driving such kind of vehicle are not in a proper physical posture due to the effort they apply while driving the cycle rickshaw every day. This would also help in making routes for making tricycle rickshaws as alternate mode of transportation in rural as well as urban areas where now a days pollution is becoming a great concern. The study also puts a light on various restrictions for power assist to become an alternate solution to the problem. A test1 apparatus was designed and then fabricated to find out the power requirement in normal condition and then compare it to the new developed solution for its possibility as an alternate solution to the problem. This apparatus can also be used to compare different feasible solutions the then finding the best which is most cost efficient and easy operating.

P.P. Dutta, S Sharma, A Mahanta,S Gupta, A. Choudhury, K. Barman, D. Barua, R. Gogoi, A. Das [4] In this we seen that the use of permanent magnet motor (PMDC) instead of an I.C engine that contaminates the environment by utilization non-renewable sources of energy. Subsequently, the use of this type of tricycle would help us protect the environment from the day by day increasing amount of pollution. Also, the developed design uses a double-spring mechanism that helps in safeguards of drivers while driving on irregular surface such as a non-cemented road or in rural areas. Moreover, the new differential used in the design transmits the power equally to both the wheels giving a more stabilized and smooth working. Old and physically challenged people may use this tricycle as they cannot drive the conventional tricycle for long as it requires a large amount of energy for a long period of time. This uses a simple plug in and charge battery that can be charged easily without any additional setup required, thus making it ecofriendly and simple to use. Impact studies show that the rear, part of the tricycle is safer (0.0001250 Pa) compared to the front connections with front wheel ($1.4438e^{8.0}$ Pa).

Sahil Kakria [5] the structure and investigation approval gives the heading to improve the plan reliability of the vehicle. This is finished by doing the reproduction for mistreatment conditions in sitting and standing burden cases and keeping up the pressure and dislodging under wanted levels. Testing on vehicle model will be done on the last vehicle model before utilizing it for business applications.

Gomish Chawla Parmjeet Kaushik Rajat Singhal [6] In this paper, we find designing of a vehicle which can be operated both electronically and mechanically and also has an appealing design and is ergonomic. The frame is very light yet strong and made of pure rolling steel, has efficient braking and ideal power to mass ratio thus performs good in all the static and dynamic test that have been performed on it. Thus the vehicle a is built with an effective compromise between each and a every section to attain best possible stability, speed, acceleration, response, a safety and feel. The vehicle was a designed and tested in a national event “SAE NIS EFFICYCLE 2015” a where it could clear all the Static a and Dynamic Tests in a 1st attempt and a obtained an All India Rank-4 with Best Innovation an Award as a well as the a kj Most a Light Weight Vehicle an Award.

A.Rodríguez, B.Chine, and J. A. Ramírez [7] In this study a F.E.A of a tricycle frame made of aluminum using Comsol Multiphysics® 5.2 as a tool of analysis.

The frame of the cycle is being evaluated for different set of load using Beam and Solid Mechanics Interface and the stress and deformation have been found. On doing the structural analysis it is found that some areas of the tricycle frame will not be able to bear the loads thus require some amount to refinement. The fatigue analysis show that the design does not have a long term durability against fatigue which need to be developed by improving the design of the tricycle. Using fatigue life results found in the analysis 6061-T6 aluminum could be a better choice in fabrication of a tricycle. The FEM 1simulations1 have provided 1useful 1insights in defining1 the structural performance1 of the tricycle, gathering1 knowledge for future 1studies.

Nanade Sunny H. [8] In this study these conclusions were drawn, it was found that seamless bush were more effective compared to the seamed bush in the manufacturing of a new chain. The model of the chain is such developed that the contact non linearity is found with the help of frictional contact and the data for the plastic region has been given to include the non-linearity thus observing the strain variation. Using the new dimensions a new model has been evolved having higher tensile strength. In this study, graphs have been plot that give the stresses developed and the elongation in the chain also the area where the stress concentration in the most is predicted. With the help of these graphs we can predict the Factor of Safety, Fatigue life and Fatigue Damage. In the testing process tensile were also done that gave the same result as that performed on the universal testing machine which is quiet time consuming. They also developed parametric model that removed the task of again and again creating new models for every specific change.

Parag Nikam, Rahul Tanpure [9] Here we see that a newer design of a sprocket was developed and optimized. It is found that the reduction in weight is about 15.67%. In the new design the von-Mises stress is lesser than the primary design although there is a little increase in the total deformation, however it is within limits. This leads to an ultimately safe and reliable design.

Okpala, Charles C., Chukwuzitelu, Joshua C., Okeke, Peter O., and Egwu, Samson I.[10] The main focus of the project was to design and fabricate a strong load bearing tricycle which is mostly made of locally available material. The design was such that the front and end portion of the design were fixed with the sub frame which would withstand the impact loads whereas the crumple 13 zone of the body will absorb the shocks in case of a collision thus reducing the impact experienced by the driver. The selection of the material for fabrication of the chassis gave optimal result at a low cost compared to a hollow square pipe of 2.5mm thickness made of mild steel. The use of the new material with a higher yield strength provide the tricycle with necessary support to carry a load of about 750kg. The seating is comfortable and enough legroom is available for the driver as well as the passenger. The Driver has enough space to make necessary alterations in position while driving the vehicle. The seats were such designed that if the vehicle experiences any lateral force the lower body of the driver will remain safe. It is to be noted that during acceleration, the torque of the rear wheel pushes the forward part of the driving tyres .downward, as the front of the driving axle housing is lifted producing rear-ward.1 weight transfer, which tends to lift the tyres. from the ground reducing tyre-to-road .2friction, thereby reducing steering control. .The aerodynamic feature of the vehicle was.2 enhanced by the streamlined body structure hence higher operational speed and fuel economy. The ergonomic suitability .of the driver/passenger seats

was greatly enhanced due to the research carried out and. also the adoption of SAE standard for .2seat design. The ground clearance of the .tricycle was optimized to 200mm which is better than the ground clearance of the conventional tricycles. Also, the cargo box was efficiently modified to accommodate. more loads. Hence, the overall objectives of the research have been successfully .achieved.

## OBJECTIVE

The main objective of the project is to develop a design that is safer than the previously existing design and can carry a load of more than 600 kg without any failure. The entire frame must be stable and must perform the required task without problems. Also while designing the tricycle it is kept in mind to reduce the unwanted components of the vehicle that add to the overall weight of the tricycle. Different types of materials were used to select the best out of them based on the following factors:-

1. Cost
2. Weight
3. Durability
4. Strength

## Material Selection

***Table 1:-****Strength of Material*

| S.No | Name | Modulus of Elasticity GPa | Shear Modulus GPa | Poisson Ratio |
|---|---|---|---|---|
| 1 | Aluminum | 68 | 25 | 0.36 |
| 2 | Iron | 200 | 77.5 | 0.291 |
| 3 | Titanium | 116 | 39 | 0.34 |
| 4 | Mild Steel | 205 | 79.5 | 0.29 |
| 5 | Stainless Steel | 190 | 77.2 | 0.26 |

With the help of data in Table 1 and the cost comparison of the above material we choose Mild steel as the best choice for our use giving us the desired strength and also not making the fabrication process costly. Also Mild steel is available in the market in number of shapes and sizes thus making the materiel easily available.

## DESIGN AND MODELLING

Before making the final design a number of designs were made and improved so that the new design can be a better version of the existing designs.

The designing and modelling work was carried out on NX 10 software which provide a large amount of tools in this area as shown in Figure [8-12].

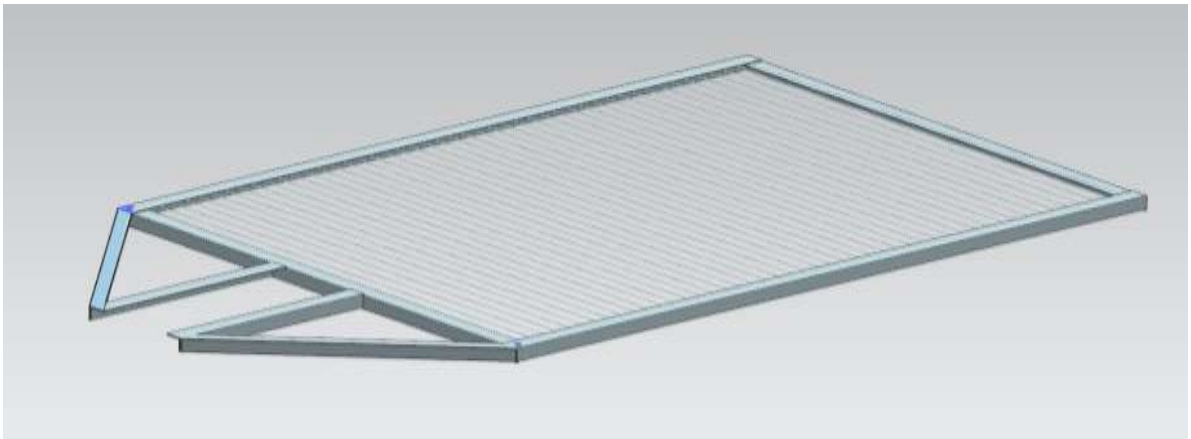

***Fig.8:-****Frame / Chassis (Modelled in NX 10)*

Dimensions
Total Length = 1573 mm
Total Width = 914.4 mm
Width of L angled bar = 31.75 mm

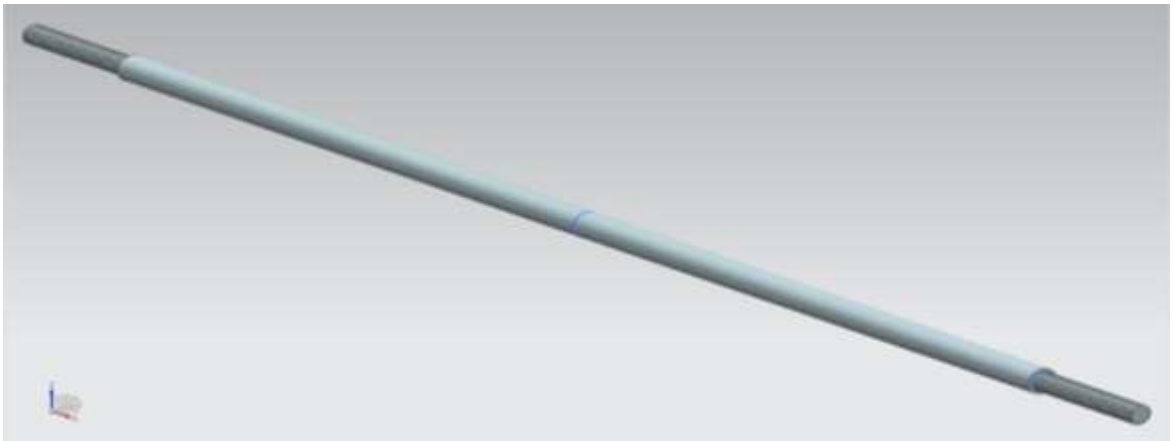

***Fig.9:-****Axel of Cycle (Modelled in NX 10)*

Dimensions
Total Length = 1236 mm
Diameter = 25.4 mm
Thread length = 110 mm
Major diameter = 19.2 mm
Minor diameter = 1.67 mm
Pitch = 2.5 mm

***Fig.10:-****Sprocket (Modelled in NX 10)*

Dimension
Outside Diameter = 272mm
Bottom Diameter = 252mm
Pitch Circle Diameter = 262 mm
Central Bore Diameter = 30mm.

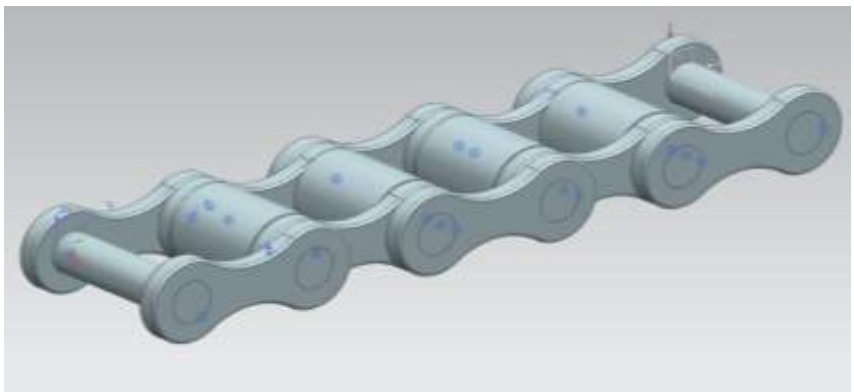

***Fig.11:-****Chain (Modelled in NX 10)*

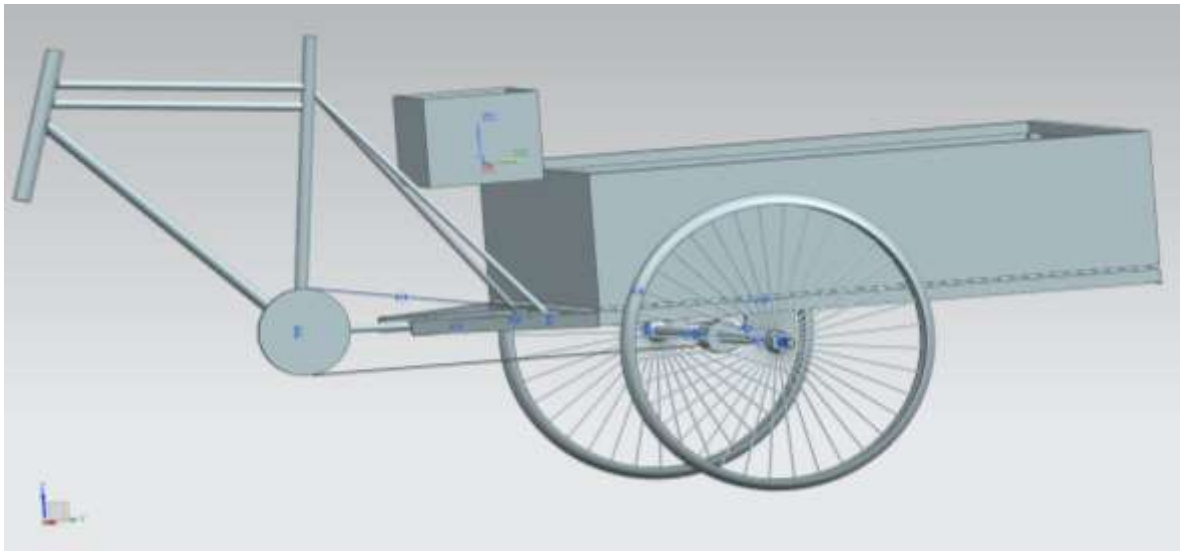

***Fig.12:-****Assembly of tricycle (Modelled in NX 10)*

**ANALYSIS**

The analysis of the tricycle components is done using ANSYS 19.2 using a number of materials under various load conditions as shown in Figure [13-16]. .

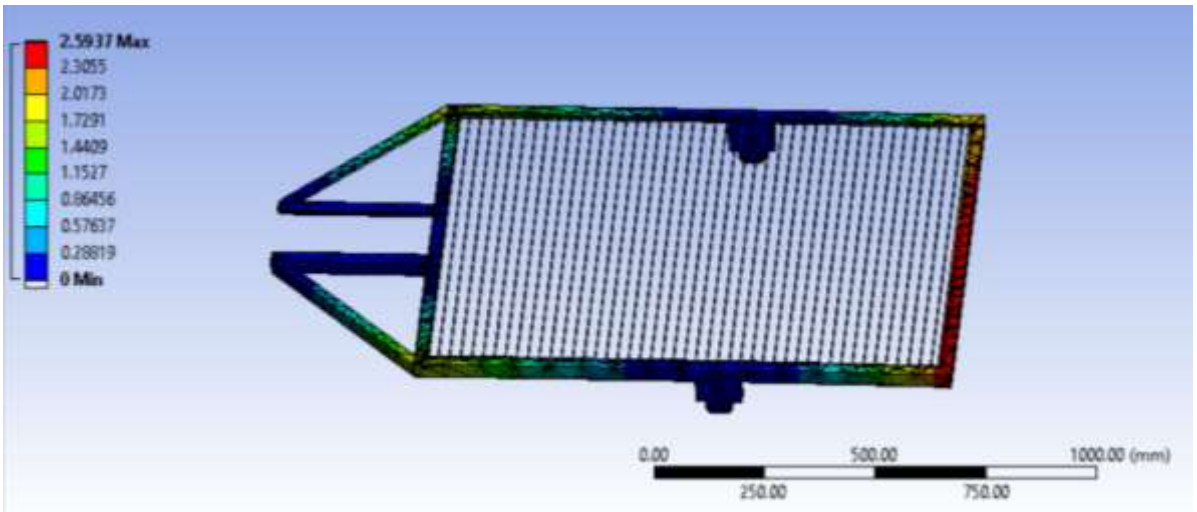


***Fig.13:-****Analysis of Frame (Analyzed in ANSYS 19.2)*

***Table 2**:-Deformation of frame*

| SNo. | Load (N) | Total Deformation (mm) | | von-Mises Strain (mm/mm) | | von-Mises Stress (MPa) | |
|---|---|---|---|---|---|---|---|
| | | Maximum | Minimum | Maximum | Minimum | Maximum | Minimum |
| 1 | 2000 | 0.74105 | 0 | 2.9734e-004 | 2.9171e-011 | 58.826 | 2.1597e-006 |
| 2 | 3000 | 1.1116 | 0 | 4.4602e-004 | 4.3757e-011 | 88.239 | 3.2395e-006 |
| 3 | 4000 | 1.4821 | 0 | 5.9469e-004 | 5.8343e-011 | 117.65 | 4.3194e-006 |
| 4 | 5000 | 1.8526 | 0 | 7.4336e-004 | 7.2929e-011 | 147.07 | 5.3992e-006 |
| 5 | 6000 | 2.2231 | 0 | 8.9203e-004 | 8.7514e-011 | 176.48 | 6.479e-006 |
| 6 | 7000 | 2.5937 | 0 | 1.0407e-003 | 1.021e-010 | 205.89 | 7.5589e-006 |

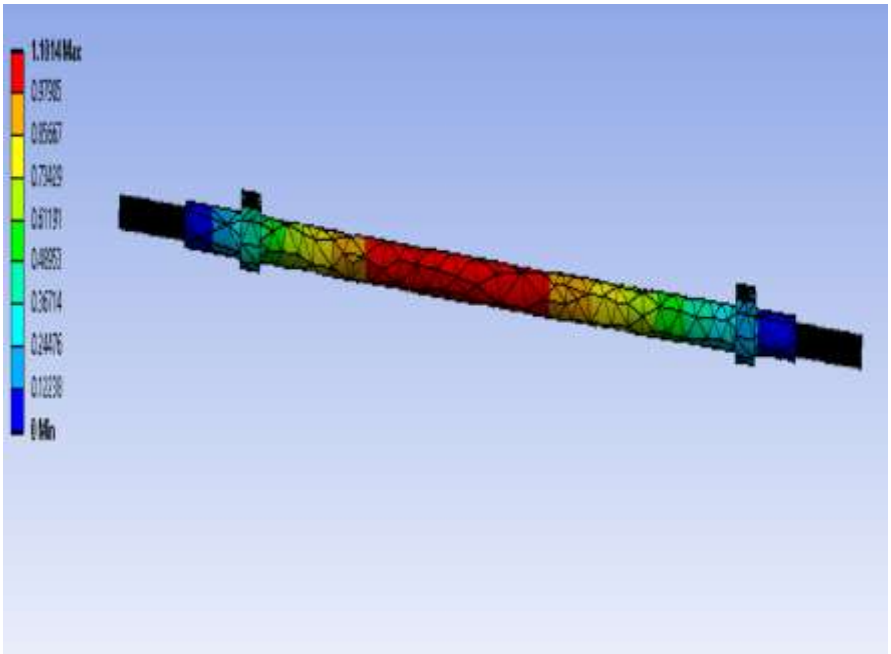

***Fig.14:**-Analysis of Axel (Analyzed in ANSYS 19.2)*

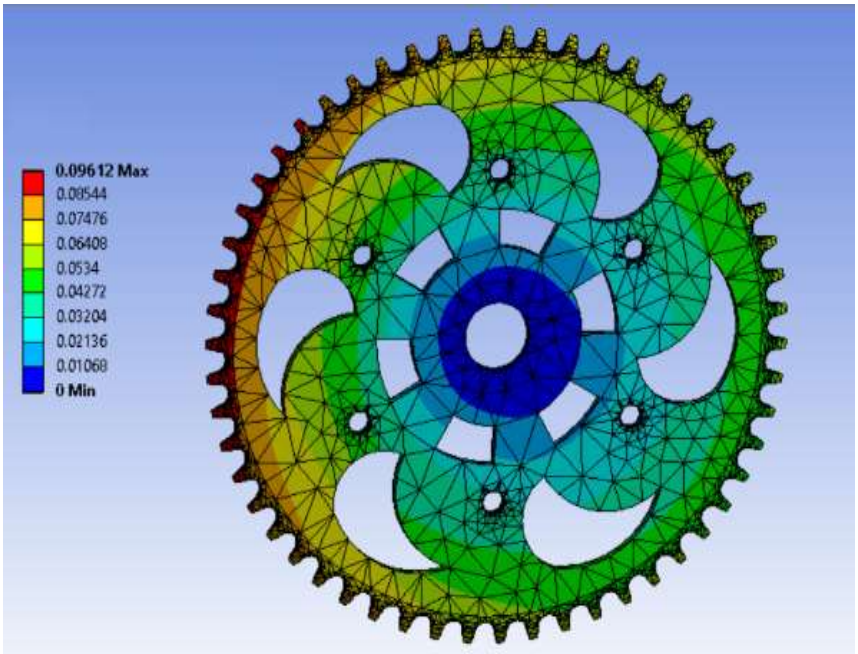


***Fig.15:**-Analysis of Sprocket (Analyzed in ANSYS 19.2)*

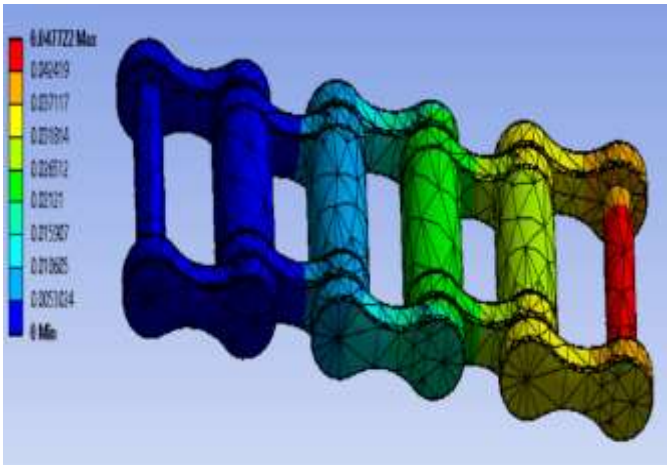

***Fig.16:-****Deformation of Chain (Analyzed in ANSYS 19.2)*

From the data in Table 2 got after analysis in ANSYS 19.2 we have failure limits of the components used in the tricycle. We see that all the components are safe till the load to 5000 N which is about 450kg. This amount of load can be transported using this tricycle.

## CONCLUSION

In this work conclusion is made that by some modification in design of frame, we can improve the overall load carrying capacity of the freight. As the main aim of this work was to improve the design of the freight so that it does not fail in unwanted conditions as they are mainly used in rural areas where people do not have much resource for repairing the broken parts. Thus by improving the design the load carrying capacity of the vehicle was found to be around 450 kg. So as of now the trike would not fail even if loaded till this limit.

## FUTURE SCOPE

In future for further improvement of the trike we can provide it with a geared motor system which will reduce the burden on the rider and will helpful even if women want to drive the trike. This motor system can be both battery powered or can use renewable source of energy.

## REFERENCES

1. Gunjal, S. U., Sonawane, G. D., Awate, S. P., & Satpute, D. R. (2014). Design, Analysis & Fabrication of Efficycle: A Hybrid Tricycle. *Department of Mechanical Engineering Sandip Foundation's-SITRC, Mahirawani, Nashik 422213 Savitribai Phule Pune University, Pune, Maharashtra, I-International Journal of Engineering Trends and Technology (IJETT)–*, *17*(8).
2. Dutta, P. P., Sharma, S., Mahanta, A., Gupta, S., Choudhury, A., Barman, K., & Das, A. (2014). Development of an efficient hybrid tricycle. In *5th international & 26th All India Manufacturing Technology, Design and Research Conference, AIMTDR* (572: 1-7).
3. Aniruddh, A., Nagesh, B. A., Coates, C., Devaiah, K. A., & Abhilash, M. (2020). Design of Cluster Bike-A 5 Person Peddling Social Bike.
4. Hickman, M. R. (2011). *A study on power assists for bicycle rickshaws in India, including fabrication of test apparatus* (Doctoral dissertation, Massachusetts Institute of Technology).
5. Kakria S. FE Modeling and Analysis of a Human Powered/Electric Tricycle Chassis.

6. Chawla, G., Kaushik, P., Singhal, R.(2016). Design and Fabrication of A Tadpole Hybrid Trike. *International Journal of Aerospace and Mechanical Engineering*.*3*(1).
7. Rodríguez, A., Chiné, B., & Ramírez, J. A. Finite Element Modeling of an Aluminum Tricycle Frame.
8. Nanade, S. H., & Bhattacharya, A. G. (2012). *Finite Element Modeling and Analysis of Drive Chain* (Doctoral dissertation).
9. Nikam, P., & Tanpure, R. (2016). Design optimization of chain sprocket using finite element analysis. *Int. Journal of Engineering Research and Application*, *ISSN*, 2248-9622.
10. Okpala, Charles C., Chukwuzitelu, Joshua C., Okeke, Peter O., and Egwu, Samson I. Design And Fabrication of An Optimized Low Cost Cargo-Bearing Tricycle. *International Journal of Advanced Engineering Technology.*