单位代码：

学　　号：75250211

分 类 号：

北京航空航天大學
BEIHANG UNIVERSITY

毕业设计(论文)

Smart Kitchen (Valve Compartment)

学 院 名 称　机械工程与自动化学院

专 业 名 称　机械工程和自动化

学 生 姓 名　Muhammad Yousuf

指 导 教 师　Feng Lin

2019 年 6 月

本人声明

我声明，本论文及其研究工作是由本人在导师指导下独立完成的，在完成论文时所利用的一切资料均已在参考文献中列出。

作者：Muhammad Yousuf

签字：

时间：2019 年 6 月

智能厨房（气门舱）

学生姓名：默哈默德

指导老师：冯琳

摘要

我们呈现出一个智能厨房，可以提高客户的意识以及固定和坚实的烹饪策略，以促进健全的烹饪。我们的智能厨房增加了传感器，以识别与烹饪过程确定的练习。在这一点上，它对合理的烹饪选择给出了评论。一些烹饪的情感支持网络已经集中给客户的方向依赖于计划井然有序，利用多媒体物质。这些框架通常会加重客户的烹饪过程，使他们向框架提供数据，从而为他们提供有利的数据。在这个意义上，这些框架被看作是“客户驱动的”。我们提供了一个名为“智能厨房”的框架，被视为“客户驱动”，客户可以定期烹饪，而不必担心框架。智能厨房可以理解烹饪形式，在一天结束时，客户在做什么。我们将检视智能厨房架构的结构，并阐明以下三个基本单位的营养，感知营养材料，并感知烹调活动。厨房可以被看作是亲戚们欣赏午餐和晚餐的好去处。许多人认为营养准备是一个幸福和自我实现的过程。

这是一种具有自动控火功能的智能厨具，并能根据锅内食物的温度进行调节的智能灶具。通过这个测试，这个程序巩固了三个重点：设计，组装，并利用 Arduino 集成开发环境和由 Google SketchUp 进行设计。考虑到这种安排以及最终客户需求的适应性，本文对激活应用程序的最佳识别、分组和后续计算进行了探索。本文展示了一个创新的智能厨房的结构、执行和评估，在这个厨房中，创新有望使日常生活更加简单的获得安慰、活力、易用和安全。智能厨房是一个厨房环境，通过客户驱动的设计方法进行全面检修，实现了家庭机械化的框架。

关键词：智能厨房, 气阀, 用户中心, 用户友好

Smart Kitchen (Valve Compartment)

Author: Muhammad Yousuf

Tutor: Feng Lin

Abstract

We present a Smart kitchen that can advance sound cooking by raising the client's consciousness of solid sustenance fixings and solid cooking strategies. Our smart kitchen is increased with sensors to recognize exercises identified with the cooking process. At that point, it gives criticisms to prescribe sound cooking options. A few cooking emotionally supportive networks have been concentrated to give clients directions dependent on the plans well ordered, utilizing multi-media substance. These frameworks, as a rule, aggravate client's cooking procedure constraining them to give data to the framework so as to give them advantageous data. In this sense, these frameworks are viewed as "client-driven". We offer a framework called "Smart Kitchen" viewed as in "client-driven", in which a client can cook regularly deprived of being worried concerning the framework. Smart Kitchen can comprehend cooking forms, at the end of the day, what the client is doing. We will examine the structure of the Smart Kitchen framework and clarify three fundamental units of the following sustenance, perceiving nourishment material, and perceiving cooking activity. A kitchen can be seen as a play area for relatives to appreciate the way toward getting ready lunch and supper. Numerous individuals consider nourishment readiness as a blissful and self-achieving process.

This work introduces an investigation of a smart kitchen stove which has a gas valve to control fire automatically and adjust it with the temperature of food in the cooking pan. Through the course of this examination, a program consolidating three key highlights: Designing, Assembling, and Programming utilizing Arduino IDE and designing by Google SketchUp. An exploration is directed to decide the best identification, grouping and following calculation that is to be utilized for the activation application, considering the adaptability that such arrangement

more likely than not given the end client needs. The paper exhibits the structure, the execution and the assessment of an inventive Smart kitchen where the innovation is expected to make regular daily existence simpler expanding solace, vitality effectiveness, ease of use and security. Smart Kitchen is a kitchen situation, totally overhauled by client-driven Design approach, which actualizes a home mechanization framework.

Keywords: Smart Kitchen, Gas Valve, Client-driven, Arduino IDE

Table of Content

Figures Table

1 Introduction

1.1 Smart Kitchen

Cooking is a standout amongst the most significant exercises in our day by day life. With the sending of ICT (Information and Communications Technology), it ends up conceivable and essential to enable people to cook with ICT. In cooking, we once in a while alluded to a formula. The formula depicts the process of making food, the route how to make a dish as a consecutive request of cooking steps, every one of which is specified by cooking activities, for example, bubbling, cutting and so on and nourishment materials to be taken care of. Since the formula is depicted in a formula book, we have to allude it to pursue the formula amid the cooking procedure. The formula book incorporates literary portrayal and static pictures, which are some of the time too ambiguous to even think about conveying the state of dealt with sustenance materials and the planning to accomplish something. For instance, a sentence, "To make the custard, whisk the egg whites until stiff enough to be cut with a blade" with a static picture of stiffly whisked egg whites is guidance written in a formula book. It is difficult to envision how stiff it is, from the sentence and the picture accurately. A video direction in a cookery program gives progressively solid thought of the state of the nourishment materials. We can envision the stiffness all the more definitely from the appearance of the egg whites appeared.

Now a days, there are a few frameworks [1, 2, 3] which shows the diagram of cooking directions in the plans by interactive media direction. We name them intuitive formula frameworks. Intelligent formula framework is to give guidelines of formula through the showcase, voice direction and other yield gadgets well ordered in the best possible planning amid the cooking. These current frameworks are "framework driven" as in the client needs to adhere to the given guidelines, and the framework requires him/her to demonstrate the planning, for example, the finish of the cooking ventures so as to get proper guidance. Such a framework driven plan is unfortunate to everyday use.

With a "client-driven" cooking genuinely steady system, a customer can cook without being stressed over the structure. Here, we propose a "customer driven" cooking genuinely steady

system named Smart Kitchen. Smart Kitchen is relied upon to know the recipe the client is following before the cooking as the given learning. It gives direction that the customer should do the accompanying either the cooking steps finish or when he/she asks. The customer can change the cooking steps energetically. Under this customer driven thought, we organized Smart Kitchen and made three basic modules of the accompanying sustenance, seeing sustenance material, and seeing cooking exercises.

Nowadays, the kitchen is the essential room of the house, a multifunctional space where people contribute a lot of vitality to prepare and prepare suppers, to eat them and store the arrangements. Moreover, a kitchen can be seen as a space for the relatives to get together and sit back in the midst of lunch and dinner arranging.

Specifically, it was evaluated that the kitchen is where the family invests most of the energy (35%) [4]. The kitchen is additional space increasingly "perilous": the greater part of the local mishaps occur in the kitchen (55%) [1]. No other room of the house is so hazardous, on the grounds that in some other room the recurrence of mishaps is in every case under 10% [5]. The primary driver of injury and occurrences is because of the ordinary utilization of gadgets and devices of the kitchen, for example, blades, broiler, little apparatuses, and cookware. The greater part of them happens for diversion and rare counteractive action. The kitchen and specifically the worktop, have frequently lacking lighting and this causes loss of permeability so the expanded danger of mishap. Moreover, the space over the worktop is frequently loaded with frill and a wide range of items, making ordinary undertakings progressively troublesome and risky.

The kitchen is in like manner the space with the higher number of "machine parts" and the room that consumes greater imperativeness in the house. It assessed that kitchen mechanical assembly, including ice chests, coolers, stove, and dishwashers, speak to about 27% of nuclear family control use [6]. Hence, the requirement for diminishing the essentialness use of a kitchen transforms into a need. In most home computerization systems, control is given by the customer that sets up physically all parameters. Subsequently, the practices and exercises become central for imperativeness saving. Thusly, care and analysis about power use is a key point to save essentialness.

Our principle center has been to make a smart kitchen where the client is the focal component of the framework plan. Specifically, it was endeavored to make increasingly agreeable and more secure the kitchen condition through the incorporation of a progression of innovative interface smart and high ease of use arrangements. Innovation turns into help and a device by which to guarantee superior decency of the kitchen as far as security, solace, and prosperity. Specifically, it has been built up a smart framework that permits to facilitate the apparatuses and subsystems so as to streamline vitality utilization, increment vitality effectiveness, and improve the convenience of the kitchen.

1.2 Research Goal

Smart kitchen or Smart kitchen appliances are generally utilized in homes, eateries and nourishment enterprises these days. A few kinds of research have been done in different fields. These territories might be the improvement of smart cookers, smart iceboxes, smart espresso machines or even smart chopsticks.

Smart kitchen apparatuses are broadly utilized nowadays to cook, preparing and for some sorts of smart capacities identified with nourishment in a wide range of conditions, regardless of in the event that they are modernly utilized, in dessert machines, for pounding sustenance or even in microwaves. The broadly observed and heard smart kitchen machines are condition neighborly or easy to use. With regards to taking care of smart kitchen gadget, we should be more secure and material cordial. The smart kitchen is one sort of recently created gadget which can meet the prerequisites.

Free made Smart kitchen cookers are broadly pertinent gadget utilized today. Such cookers are utilized to prepare sustenance of various sorts intelligently without anyone else which can be cook in a standard cooker. These cookers may have a wide alternative of cooking.

For all intents and purposes most of the examination is revolved around one of these points of view that depict the Smart kitchen: Internal correspondence organizes, Smart control systems, and home robotization and don't consider the usability of the whole structure. Our work has been occupied with the headway of a Smart kitchen to the extent physical and mental ergonomics in which advancement will be absolutely imperceptible beyond what many would

consider possible the use of the earth. Thusly, the kitchen itself will transform into an interface through which the structure will give information and alerts (visual correspondence), and the customer will be reinforced by "man-made mental ability" in the organization of nuclear family contraptions.

As written in my thesis title, it worries to grow further research, I have picked a subtask from my Lab's undertaking to make a programmed controlled gas valve in a smart kitchen framework which can control the gas stream consequently as per the temperature of sustenance. The objectives of my proposal are making the automatically controlled valve.

1.3 Background

Smart Kitchen is another individual from Kitchen family that has a few promising highlights, for example, lightweight, reasonable, effectively created, easy to control and so on. As of late, structure, creation, and activation of Smart Kitchen have pulled in developing considerations of scientists from numerous fields, for example, material science, electrical and mechanical designing. The Smart Kitchen can be manufactured by a few methodologies including multi-material 3D, shape statement fabricating (SDM) or coordinate various assembling ways to deal with make composite materials; While incorporating numerous sections of Smart Kitchen have made a few applications conceivable, for instance, exactness cooker, smart espresso creator and human-machine collaboration.

Surrounding Acumen (AmI) can be characterized as a "touchy and versatile electronic condition that reacts to the activities of the people and object and provide food for their necessities" [7]. That is, a clever framework, adjustable, ready to know about the unique situation, versatile and expectant. This methodology incorporates the whole condition, considering every individual article, connecting its cooperation with people.

AAL (Ambient Assisted Living) uses the AmI as the major mechanical assembly to give basic responses for supporting the person in his/her free living in different settings: habitations, transport, working conditions, etc. The European Ambient Assisted Living Innovation Alliance (The AAliance) proposes three full scale circumstances for AAL progression [8]: AAL persons, with the objective of "Developing honorably for the individual"; AAL in the system,

which is based on applications in improving the social thought of more seasoned people, their exchanges and their participation in the system; and AAL@work, which is revolved around application supporting old and people with insufficiencies at work.

Along these lines, as O'Grady et al. present [9], an "Including Assisted Living (AAL) is bolstered as mechanical game plans that will enable the more established people to keep up their self-sufficiency for a more drawn out time than would somehow be the circumstance". To achieve this goal, the AAL should think about the setting, including the individual, giving help when required, separating odd conditions and acting in like manner.

We can find a couple of works focused in pass on AAL with different purposes, for example the MONAmI adventure picks suites of imaginative organizations to help people in peril of disallowance and loss of autonomy [10] or the Necessity structure proposed by Muñoz et al. which offers a structure to address and endorse alerts in a private circumstance [11].

Focusing on development affirmation in the kitchen, Lei et al. [12], exhibit a system based just in an RGB-D camera (present-day significance cameras that give synchronized shading and significance information at high edge rates) which recognizes activity and instruments used (between a picked assembling of 35 things and 25 exercises). The system is fit for perceiving objects with a precision of 60% and activities with an accuracy of 82%. Suryadevara and Mukhopadhyay [13] made and attempted a Smart home checking system reliant on a remote sensor sort out (no camera or vision sensors) to screen and survey the flourishing of the more seasoned.

Of course, a couple AmI have been made to benefit and guide the customer in different activities achieved in the kitchen. Ficocelli and Goldie [14] present an assistive kitchen with talk correspondence and a motorized cabinet structure to back securing and recuperating things and to get plans for supper arranging. We can in like manner find systems that deal with the customer to have a progressively worthwhile eating routine. The Smart Kitchen planned by Chen et al. [15] offers information constantly about the calories, dietary advantage and their balance (fortifying and calories). The structure perceives when another repairing appears and a short time later gets some data about the name of the fixing to revive the information of the screens.

The UI is principal in all of these systems including old and development. The i2Home adventure attempts to make mechanical assemblies and contraptions clearer for people with delicate scholarly shortcoming and the more seasoned using another standard UI standard: The Universal Remote Console (URC) [16]. Regardless of the way that this endeavor isn't occupied with the kitchen, it makes reinforce organizations consolidating a couple of progressions and contraptions: devices (hood, stove, fridge, cooler, dishwasher and cooling), contact screen, RFID radio wire which execute sensitive surfaces for things outfitted with Smart stamps and lighting equipment [17]. Schwartze et al. [18] present their work in graphical interfaces for Smart Environments with the "4-star Cooking Assistant" application which exhibits the capacity of their system to dynamically change a graphical UI to the present setting of use.

Expanded reality methodologies have been in like manner attempted in the kitchen. Made by Bonanni et al. [19] presents a standard kitchen with the projection of information onto articles and surfaces to enable people to cook even more safely and viably. Moreover, a couple of articles could be successfully joined in an AmI, for instance, the Intelligent Spoon [20] which can check the temperature, sharpness, saltiness and thickness of sustenance or the Chameleon Mug [21] which chooses the temperature and sugar measurement of liquid and, even, the state of the milk.

In the year 2009, Kiritsis proposed another significance of astute thing reliant on what happened with us as a person. It proposes shut circle thing life cycle the administrators to develop continuously improved thing data progressions, which can be used in future to make a Smart or Smart thing and moreover to deal with static just as of dynamic thing data too. In the year 2009 Eisenhauer et. Al. was conveyed which proposed a phase to make a shrewd application for remote contraptions and sensors. This will work as a middleware for the architect to make a Smart application for the introduced structures. It used unique blend of Service-arranged Architecture (SoA) and a semantic-based Model Driven Architecture to create this stage.

In the year 2010 Rolf revolves around new security endeavors and distinctive assurance challenges in the IoT. It revolves around different parameters like ambushes, data affirmation, get the opportunity to control and client insurance to examine the assurance challenges and to

make another security model. This paper moreover depicts the noteworthiness of the establishment of a group doing research on the legitimate troubles of the IoT. It furthermore proposes to create a genuine structure which will be progressively versatile and more straightforward to change as shown by express prerequisites.

In 2010 Haller, bases on delineating all the huge phrasings used in the snare of things in detail. This paper attempts to bring clarity by portraying the most noteworthy terms like things, devices, and substances of interest, resources, tending to, character and even more basically, the associations between them. In 2010 HONG et. al, it proposed remote sensor sort out advancements dependent on various standard shows, web shows to support web of things. It bases on the most proficient method to alter the IP to the space of things. This article displays the Sensor Networks for an All-IP World (SNAIL) approach to manage the IoT (Internet of Thing). It also fuses four gigantic framework shows: transportability, web enablement, time synchronization, and security.

In the year 2013 Tsado et. Al proposed to recognize the gas spillage with the help of GSM PDAs. They used two gas sensors; used to perceive gas spillages in a particular zone. They have in like manner used 8051 microcontrollers altered in low-level processing develop and a GSM phone. The GSM phone is intended to send gas spillage alerts as a short message organization (SMS) message which demonstrates the cautious territory to another GSM phone to engage brief significant action. This whole system will provoke a snappier area when the gas spillage occurs. In 2013 Guo et. al, prescribe to make an IoT reliant on the offhand, shrewd frameworks organization of devices (e.g., mobile phones and Smart vehicles) using short-broaden radio strategies (e.g., Bluetooth and Wi-Fi). This will make a comfortable association among the human and deft relationship of Smart things since it oversees information sending and spread inside and among the spearheading systems surrounded subject to the advancement and canny contact nature of human. In the year 2014 Apeh et. Al proposed a system that recognizes gas spillage and alerts the supporter through alarm and status appear and besides slaughtering the gas supply valve naturally. It subsequently uses a consistently hindered solenoid valve for the end of the gas valve before calling for help by methods for visual exhibit and alert. It thus opens the valve again for commonplace errands once the spillage goes underneath the set point.

In 2014 Bello and Zeadally, centers around how two gadgets in any IOT ought to convey astutely in light of the fact that the nature of the data assembled relies upon how smart the gadgets are. In IoT, various gadgets chip away at various system standard, so this can prompt a few systems challenges and this can't be fathomed by conventional directing conventions. Along these lines, this paper proposed best in class directing calculations, which can accomplish an insightful D2D correspondence in the IoT. In the year 2016 Sun et. Al suggested that one can utilize IoT to make a system of the different associated device and Smart sensors, with the goal that this system can ready to recall the past and plan for what's to come. They likewise contended that to utilize enormous information examination to get the ideal SCC. It recommended that one can utilize versatile group detecting and distributed computing to construct SCC and proposed that SCC will improve reasonableness, conservation, and feasibility.

2 Literature Survey

2.1 History of Smart Kitchen

IoT (Internet of Thing), has changed the lives of people. Enormous augmentation in customers of Internet and adjustments on the internetworking advancements engage frameworks organization of standard things [22]. Everything is astoundingly conspicuous through its introduced preparing structure inside the web establishment [23]. If the settings of the earth can be made to respond to human lead naturally, by then there are a couple of central focuses. Enveloping learning responds to the lead of tenants at the home and outfits them with various workplaces [24]. ―Internet of Things‖ is about physical things bantering with each other, machine-to-machine trades and individual to-PC correspondences will be connected with ―things [25]. A complete target is to make ―a better world for human beings‖, where challenges around us perceive what we like, what we need, and what we need, and consequently, actin like way without unequivocal headings [26].

Vaporous oil is an essentialness source that is routinely used in homes for cooking, and warming. Cash related adversity similarly as human injuries are happened as a result of incident brought about by gas spillage. To perceives gas spillage and alerts the supporter through alerts and status set away in the database and show on the Android device is the work purposes of the organizing a structure [27]. The system is a canny structure, as it doesn't make a commotion aggravation by constantly sounding alert anyway gives the cautions to the customers. Impacts due to gas spillages are avoided by this development and improve the security of life and property while using neighborhood cooking gas.

We proposed the structure and advancement of a SMS based Gas Leakage Alert System. Gas sensors were used to perceive gas spillages in a kitchen; its yields are then interfaced with an ATmega32 microcontroller tweaked in low-level registering develop. The GSM phone is orchestrated to send gas spillage alerts as a short message organization (SMS). We can get this and generously all the more prosperity feature that can be facilitated with the motorization structure fuses temperature sensor, weight sensor. Continues checking of gas spillages in the

kitchen is performed by this.

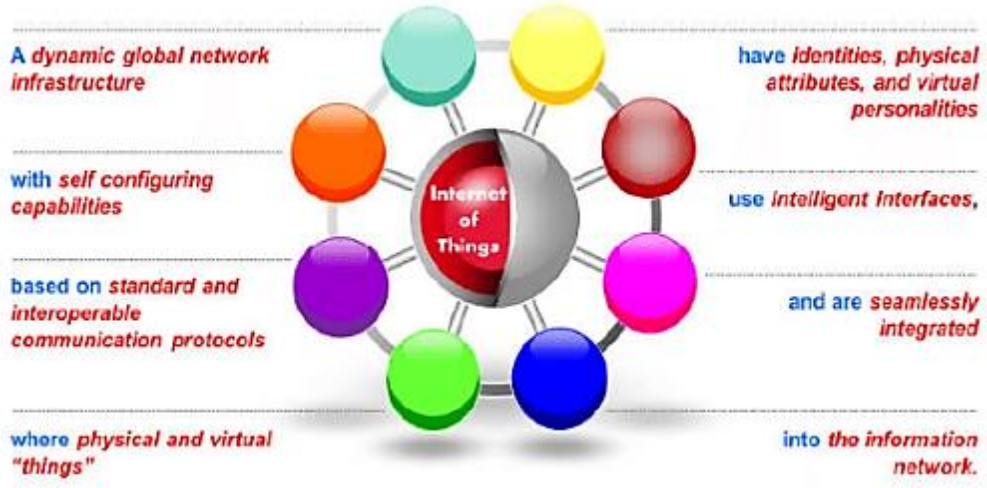

Figure 1 A Structure in IoT (Internet of Thing)

Reliably the front-line people foresee that new contraption and new development ought to unravel their regular day to day existence. The innovators and examiners are constantly endeavoring to find new things to satisfy the overall public yet the method is so far vast. Amid the 1990s, Internet accessibility began to duplicate in enormous business and client markets, in any case, were so far confined in its usage in light of the low execution of the framework interconnects. Amid the 2000s Internet accessibility transformed into the standard for certain applications and today is typical as an element of various endeavors, present day and customer things to offer access to information. Regardless, these devices are as yet fundamental things on the Internet that require progressively human affiliation and seeing through applications and interfaces. KITCHEN condition watching is one of the critical measures to be eagerly checked logically for prosperity, security, and comfort of people. With the degrees of progress in Internet headways and Wireless Sensor Networks (WSN), another example in the season of all-inclusiveness is being made sense of it. Huge augmentation in customers of Internet and modifications on the web working advances enable frameworks organization of normal articles. Web-engaged structures have offered a remarkable assurance to clients.

Smart home circumstances have created to the point where normal articles and contraptions

at home can be sorted out to give the inhabitants new means to control them. Advances in mechanized equipment have enabled the improvement of little in size and grant in short divisions sensor centers. They are negligible exertion, low-control and multifunctional. The sensor center points include recognizing, data dealing with, and correspondence fragments, impact the likelihood of Wireless Sensor Networks (WSN) in light of communitarian effort of a gigantic number of centers. There are incalculable overseeing WSN applications, in any case, it is up 'til now possible to explored in WSN headway and upkeep.

The structure and headway of a Smart watching and controlling system for kitchen condition logically has been represented in this paper. The structure basically screens kitchen condition parameters, for instance, light power, room temperature, fire revelation, development acknowledgment, and LPG gas level, has been made. The structure can screen the status of the kitchen and send an email just as a prepared SMS by methods for GSM organize subsequently, if the conditions get weird, to a concerned master's mobile phone. The concerned master can control the structure through his PDA by sending AT Commands to GSM MODEM or by making the principal walks in customer email, which is mystery state verified. Customers can screen and control transducers on powerful Web pages redesigned with Embedded C. This structure finds a wide application in districts where physical closeness is ludicrous continually. The system offers an aggregate, ease, astonishing and simple to utilize strategy for constant checking and remote control of the kitchen. A model is made and attempted with a high accuracy result.

It was the 1950s. America had quite recently won the war, individuals were moving to suburbia and beginning families, the economy was shining, the space race had quite recently started, and the future looked splendid. It was the resurrection of age, and at the focal point, all things considered was the American family. Developing advances provided mortgage holders' requests for making life around the house simpler. Dishwashers were recently moderate, as were coolers and clothing machines. So, it's not astounding that, with this abundance of accommodating machines, individuals started to consider a progressively mechanized, associated family unit.

Be that as it may, it would be an additional couple of decades before producers truly

warmed to the idea of "Smart home," and, after its all said and done, it would neglect to take off. So, all things considered, organizations looked to a progression of later logical revelations to sell items that were new, creative, important, and in some cases simply ludicrous.

All through the 60s, the apparatus business blasted gratitude to a center arrangement of as of late aced advancements: refrigeration, thermoelectricity, and sanitation. These were tremendous advancements and drove legitimately to refrigerators, climate control systems, and dishwashers showing up in many homes around the nation.

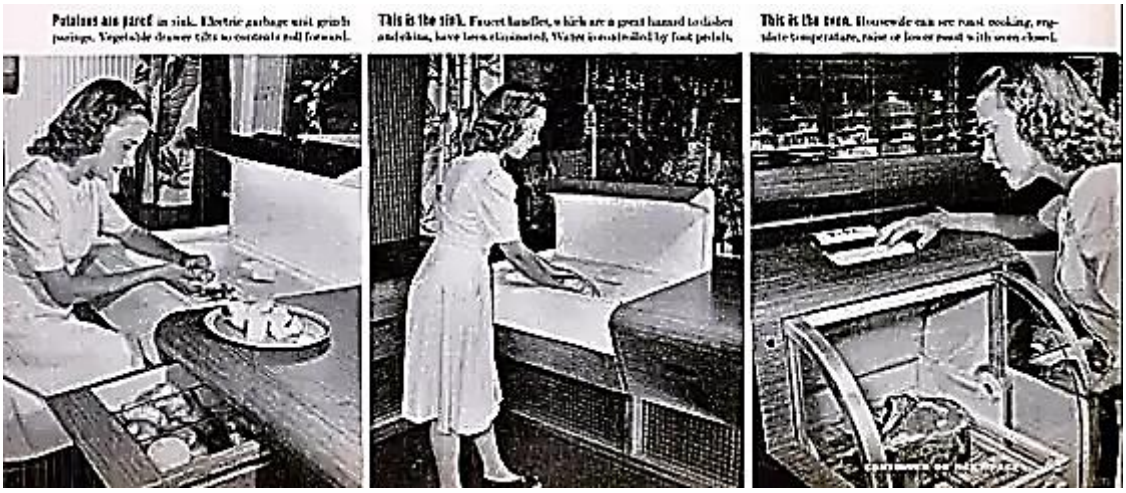

Figure 2 Imagining the kitchen of tomorrow, Life magazine in 1943

It was likewise the beginning of the space age, when striking advances like nuclear vitality, rocketry, lasers, and even early PCs were tagging along. Designers, makers, and the overall population alike became involved with the energy of the apparently unlimited potential outcomes. H.F. Koeper, an engineer from the University of Minnesota, precisely summed up the connection among innovation and residential usefulness in an AP article from 1954: "The place of things to come will be more a matter of 'what the open will request, as opposed to what science will give, in spite of the fact that the last would be all the more surprising.'"

Throughout the following couple of decades, makers took a stab at items that were wonders of innovation, however, were entirely unrealistic and look really senseless by and large. Probably the most out of sight were attached to innovation that was really valuable.

Thermoelectric cooling, for instance, was a standout amongst the most significant advances of the twentieth century (in any event to the extent local innovation goes). Semi-conduits had given makers another, an increasingly proficient method for cooling metal through the Peltier Effect, which could then be utilized to construct home cooling units and minimized iceboxes, similar to wine coolers, smaller than expected refrigerators, and chest coolers.

However, after thermoelectric specialists had tackled widespread issues—like rooms being excessively hot and lager being excessively warm—they began to extend their creative abilities. In 1953, the Portsmouth Times (of Ohio) solicited a board from machine industry specialists about the home of things to come. One individual clarified how cooling innovation would inevitably enable property holders to "bring the charms of [their] garden into the [the] front room." That is, the capacity to suffuse alive with, for instance, the "aroma of rose blooms."

Inside only a couple of years, however, producers had radically tempered their desires for thermoelectric innovation. Forced air systems and smaller than expected ice chests have driven forward (however blowers are the overwhelming innovation now), yet a couple of other useful thermoelectric applications have gone along. Sanitation innovation pursued a comparative circular segment. Another master in the Portsmouth Times story envisioned machines able to do completely sanitizing dishes. This thought isn't totally off-point—sanitation controls are ordinary on dishwashers—however, it would be an additional couple of years before individuals acknowledged how absolutely superfluous (and costly) it is to totally clean dishes. Sanitation cycles, the industry would before long acknowledge, were considerably more common sense. The AP story from 1954 in which Koeper was cited even envisioned a room-temperature refrigerator that would save nourishment by beating it with gamma beams. While nourishment light is demonstrated and to some degree regular practice today in modern settings, residential use is totally incredible for heap reasons. For one, it's really perilous to shoot your home with ionizing radiation, regardless of whether the cyclotron is pointed soundly at the vegetable cabinet. Additionally, while gamma radiation is a very compelling sterilizer, it can likewise modify flavor, surface, and obliterate certain nutritious mixes.

2.1.1 Smart Slow Cooker

Figure Smart Slow Cooker

Indeed, even the first "moronic" variant of the moderate cooker figured out how to convey on the Future Kitchen's guarantee to free us from the requests of manual cooking: simply hurl the fixings into the pot together, set the temperature, and leave. The Smart Slow Cooker, to be discharged by Crock-Pot any day presently, goes above and beyond by making every one of the controls available by means of clients' cell phones. It's fueled by Belkin's free WeMo application, which gives clients a chance to begin or quit cooking, changes temperatures and cook times, and set alarms and notices.

2.1.2 Egg Minder

This Smart egg plate tells you what number of eggs you have left in the ice chest while you're out at the supermarket. Each egg opening has a sensor that monitors each egg's individual time span of usability dependent on when it was added to the container and LED lights to demonstrate which of the rest of the eggs are freshest.

Figure 3 Egg minder

2.1.3 Ever cook Automated Pressure Cooker

At long last, there's Every cook, which is intended for the individuals who don't feel as good in the kitchen. As a matter of fact, it's as near a culinary specialist in-the-case as we've seen: part nourishment processor, part weight cooker, and part robot. To begin with, select a formula from an online database through the versatile application. At that point feed the required fixings through the slicer and into the cooking pot. A mechanical blending paddle keeps things moving, and the warmth settings and cooking time are taken care of naturally as per the formula you picked. There's even a scale so you don't need to gauge - simply include a fixing until Every cook guides you to stop. It's a flawless thought, yet Every cook has battled with crowdfunding. In spite of the fact that the fashioner did not react to Postscape's solicitation for a remark on the gadget's future, work is by all accounts proceeding.

Figure 4 Ever cook Automated Pressure Cooker

2.1.4 Ecomo Fount

Water quality has been in the news as of late, with upsetting disclosures that what leaves the tap in certain networks isn't protected to drink. While no home filtration framework can secure against a genuinely broken civil water supply, the Ecomo Smart channel offers a little true serenity to the individuals who need to make sure of what's in their neighborhood water. In the same way as other in-home channels, Ecomo connects to the kitchen spigot. As water courses through, sensors in the gadget break down it for substantial metals, microbes, pH,

Figure 5 Ecomo Fount

unsafe synthetic concoctions and different risks. A shading coded LED ring gives moment criticism on water quality, and a versatile application offers point by point information and proposals including which of a few included channels to use for ideal water. Ecomo's photovoltaic outside gives sun-powered power, while the inside equipment depends on microfluidics innovations for unequivocally controlling the progression of minor measures of fluid — which CEO Eric (Zhiqiang) Liworked on at Carnegie Mellon.

Smart home circumstances have created to the point where conventional things and contraptions at home can be orchestrated to give the inhabitants new means to control them. The sensor centers include recognizing, data getting ready, and correspondence parts, impact the likelihood of Wireless Sensor Networks (WSN) in light of network arranged effort of a tremendous number of centers. There is a huge number of looks at overseeing WSN applications, be that as it may, it is up 'til now possible to researched in WSN progression and backing. This paper takes a gander at the probability of blend WSN and the organization robots into a Smart home application. The organization robots can be seen as flexible center points that give additional sensorial information, improve/fix the system and accumulate information from remote sensor centers. On the other hand, the WSN can be considered as a growth of the sensorial capacities of the robots and it can give a Smart circumstance to the organization robots.

Utilizing ultrasonic sign coding of ultrasonic sensors with different pyroelectric infrared sensors (PIR) can be utilized to recognize an interloper in a home or a storage facility. The PIR sensors are put on the roof, and the ultrasonic sensor module comprises of a transmitter and a recipient which are set in a line heading; be that as it may, ultrasonic sensors with a similar recurrence are liable to obstruction by crosstalk with one another and have a high miss rate. To conquer these burdens of the ultrasonic sensor, structures have been built up that decrease the miss rate from the ecological impedance by utilizing an ultrasonic coding signal. Both ultrasonic sensors and PIR sensors are overseen by the greater part casting a ballot component (MVM).

In the 21st century, the all-inclusive community needs the world at their hands. Its outlets the changes of figuring and Smart condition. A couple of developments like Ubiquitous/unavoidable and enveloping understanding satisfy the best need of shrewd world

yet these headways are not immovably joined with the web, so the all-inclusive community needs another advancement extension. Web of Things (IoT) is an ideal creating development to affect the web and correspondence progressions. Simply "Web of Things" interfaces „living and nonliving things" through „internet". Usually in the article arranged perspective, everything on the planet is considered as a thing, in any case, in the IoT perspective, everything on the planet is considered as a Smart thing, and empowers them to pass on one another through the web propels by physically or in every way that really matters.

2.2 Overview of Smart Kitchen

The worldwide Smart Kitchen outline is a key knowledge crosswise over different parameter. The strong research on the Smart Kitchen is set up with the intent to meet the prerequisites of the general population regarding the accessibility of information, examination, insights, and a precise gauge of Smart Kitchen. Kitchen report covers review of the market which gives the general population's point by point data about the Smart Kitchen, for example, the various kinds of items, the uses of the items and their presentation in the market. This can enable the client to identify with the market and increase essential experiences into the Smart Kitchen for better understanding and arranging.

2.2.1 A Smart Kitchen to Promote Healthy Cooking

A kitchen can be seen as a play area for relatives to appreciate the way toward getting ready lunch and supper. Numerous individuals consider nourishment readiness as a blissful and self-achieving process, as opposed to only a day by day standard or diligent work. All the more critically, they view sustenance planning as a demonstration of thinking about an entire family. Through preparing solid nourishment for their darling relatives, they get smugness in advancing wellbeing and decrease dangers of constant infections in the family. For instance, if a relative is old, extraordinary considerations ought to be given to get ready suppers with lower calories, protein, and sodium.

Plenty of research attempts have focused on developing kitchens with a grouping of cutting-edge media to make rich, wise experiences for customers procedure of preparing

sustenance in the kitchen. Some work has focused on offering consideration regarding help to play out various errand's practices in the kitchen. For example, Counter Intelligence adventure from MIT has expanded a kitchen with encompassing interfaces to improve usability of a physical circumstance. Their extended reality kitchen can help customers in choosing temperatures, finding things, following plans, and timing transitional steps in the midst of gala preparation. Other work has focused on getting or using modernized natural plans that can coordinate customers through a well-requested cooking process. For example, Siio et al. robotize the creation of web-arranged blended media designs in a kitchen. By working one of the footswitches, a customer can get photos of the cooking working condition with voice updates and sort out into a sight and sound recipe. Such mechanized plans can give a more natural experience than that from scrutinizing a paper-based equation book. The Counteractive endeavor utilizes a propelled recipe to tell people the best way to cook by envisioning media plans onto a touch board like the natural kitchen counter.

Rather than extending kitchens with a collection of cutting-edge media to make natural cooking experiences, our Smart kitchen is based on propelling sound cooking by exposing issues of strong sustenance fixings Our kitchen is broadened with sensors to distinguish practices in the cooking methodology. By then, it can determine how well these activities fit in with strong cooking and give relating reactions to raise sound cooking care and recommend strong cooking decisions. For example, while a customer is making a cheeseburger and broccoli container burn dish, our kitchen can perceive when he/she is including an overabundance of red meat, salt, or cooking the broccoli for an actually lengthy timespan. The kitchen exhibits the proportion of fat from the red meat, the measure of sodium from the salt, and the loss of basic supplements and minerals in the broccoli from broad cooking time. In the meantime, it moreover shows the recommended measure of each fixing.

Nursal et al. in addition, Willet have perceived the going with key factors in sound cooking: type and proportion of sustenance fixings and cooking techniques. In addition, nature of a sound cooking system depends upon a couple of segments, for instance, cooking temperature, cooking

length, and cooking styles (e.g., seared, gurgled, consuming, microwaving, etc.).

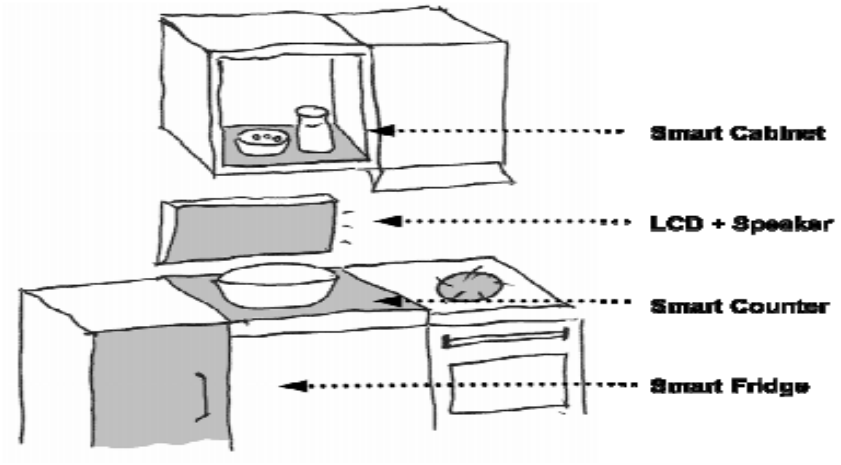

Figure 6 A Healthy Smart Kitchen Setup

2.2.2 A Smart Kitchen for Aged People

The maturing of our populaces is a notable issue in created nations. European Union populace projections are disturbing; the proportion of individuals matured 65 years or over will increment from 17.1% to 30.0% in 2060 (from 84.6 million out of 2008 to 151.5 million individuals in 2060) [28]. Comparative figures are found in the USA, where older individuals will speak to 20.2% of the populace in 2050, or in Japan, with 39.6% [29,30]. Older individuals may endure a few physical and additionally intellectual hindrances which increment with the death of years. Seniority influences detecting, data preparing ability, decreases speed and builds timing of exact developments, and so on. Every one of these issues increments challenges of perception of complex situations which may require performing multiple tasks or keeping consideration over extensive stretches of time. As a result, older individuals continuously lose the ability to perform self-ruling their day by day exercises. Hence, family machines, rather than encouraging autonomous living, become a weight that adds to maturing confinements.

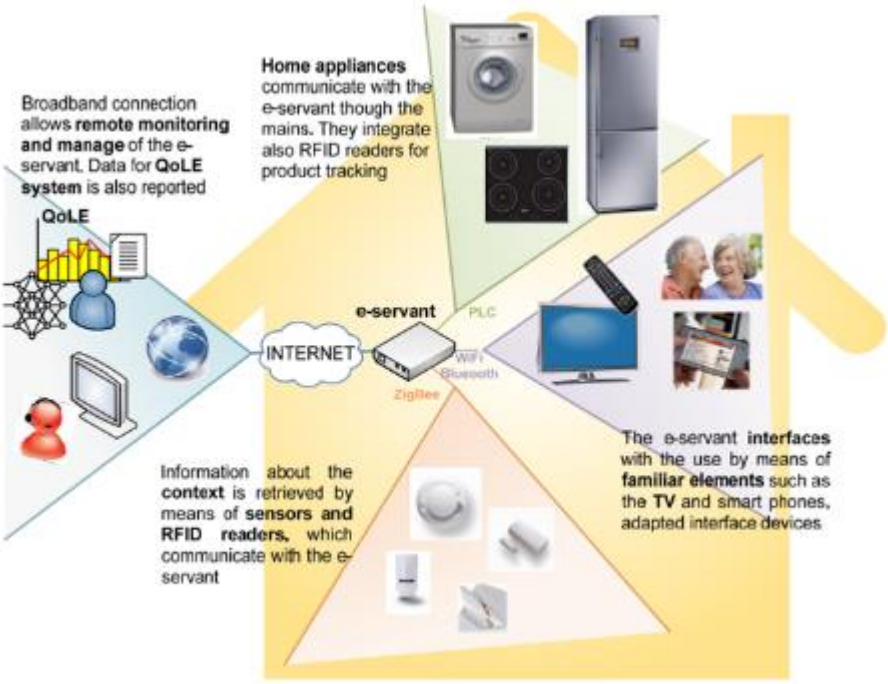

Figure 7 A Smart Kitchen for Aged People

Notwithstanding that, more established individuals are one of the gatherings of the populace most powerless against mishaps, especially at home [31]. Most residential wounds are identified with working in the kitchen: kitchen devices, cutlery, and family machines are the riskiest utensils. As a result of these mishaps, more established individuals lose trust in their capacities, diminishing their confidence and thusly, by and large, choosing to move to a nursing home. The kitchen condition is one of the situations in the home where clients can profit by Ambient Assisted Living (AAL) applications. In addition, it is where elderly folks' individuals experience the ill effects of most local wounds. It displays a structure, execution, and evaluation of a Smart Kitchen which gives Ambient Assisted Living administrations; a smart domain that builds older and crippled individuals' self-rule in their kitchen-related exercises through setting and client mindfulness, fitting client connection and computerized reasoning. It depends on particular engineering which coordinates a wide assortment of home innovation (family machines, sensors, UIs, and so on.) and related correspondence benchmarks and media (control line, radio recurrence, infrared and cabled). Its product design depends on the Open Services Gateway activity (OSGi), which permits assembling a perplexing framework made out of little

modules, every one giving the particular functionalities required, and can be effectively scaled to address our issues. The framework has been assessed by an enormous number of genuine clients (63) and carers (31) in two living labs in Spain and the UK. Results demonstrate an enormous capability of framework functionalities joined with great convenience and physical, tactile and intellectual availability.

2.2.3 Artificial Intelligence in Smart Kitchen

Assistive domestics are a field in home mechanization especially centered around the old and individuals with inabilities, went for making their lives a ton simpler and agreeable. These frameworks can give them the feeling of security and usability by giving them highlights like voice control and motion controls for the individuals who have incapacities.

The old and diversely abled experience hard time working, cooking and moving around the kitchen and they frequently need to procure help to make their lives simpler. The programmed kitchen gives them the decision of utilizing innovation to achieve their necessities as opposed to relying upon others. As lives, these days are getting too much involved and people generally don't possess energy for cooking and putting a ton of vitality in the kitchen. Thus, apparatuses should be that front line similar to saving time and remind them about imperative things, for example, their nourishment things in ice chest is going to pass soon so they can buy a couple of staple merchandise soon. Framework like this is as of now accessible in the market like LG home visit which is utilizing android interface to take a shot at it anyway framework given by me encourages some other progression as it isn't simply talking additionally gauging and scanner tag printer in the ice chest gives client opportunity to pick expiry date of specific things as it is essential to eat well sustenance.

LG Home Chat consolidates the famous LINE application to enable clients to get suggestions and control settings when far from home. With an instinctive interface, Home Chat makes speaking with LG's Smart cooler, clothes washer or broiler much like talking with a dear companion. For additional comfort, the Quick Button include empowers quick and simple access to every apparatus' most regularly utilized capacities. A Smart home computerized control framework utilizing android application and microcontroller is alluded in [32]. An

ongoing remote sensor organizes utilizing Arduino for natural checking applications can be perused in [33]. A smart home administration framework can be planned as in a reference [34]. Advancement of a remote sensor arranges to utilize MATLAB and installed microcontrollers are alluded in [35]. An ongoing manual for utilizing android application can be perused in [36]. The steadiness of the control framework is alluded in [37]. Genuine computerized nourishment requesting framework with ongoing client input is perused in [38]. What's more, a flaw identification framework is alluded in [39].

Smarty Pans is a Smart cooling container that tracks nourishment of sustenance being cooked continuously and incorporates with wellness applications and gadgets. The Smarty Pans application comprehends voice directions—as you tell the application which fixings you're adding to the skillet, the container's incorporated weight and temperature sensors empower the application to process the sustenance estimation of the nourishment you're cooking.

Figure 8 Diagram of a Non-stick Smarty Pans

The June Intelligent Oven guarantees to remove the mystery from cooking through sensors and computerized reasoning that perceive, screen and cook nourishment just as you would prefer. The stove can recognize 25 basic sustenances and cooks then the most ideal route via naturally modifying the warming components. For instance, when you put a stake in June, its HD camera converses with the locally available four-center NVIDIA processor and runs one of June's neural systems to recognize the nourishment. June at that point asks on your favored doneness and chooses a multi-step cook program—like exchanging consequently among dish and broil– to guarantee the steak is cooked as trained. At the point when the steak is done, June will send a warning to your iOS gadget.

Figure 9 The June Intelligent Oven

2.2.4 Home Automation in Smart Kitchen

Home robotization is computerization of the home. It normally portrays address that joins development and organizations through home frameworks organization to drive the condition of living. Home computerization is unquestionably not another term for science society and has been around for a basic time. Home robotization is to change condition, control of lighting, machines, and various structures, to give improved progress, solace, security, and viability. For incapacitated and old individual home motorization can be additional of institutional thought [40].

Home computerization has been extending immensely in latest years on account of a great deal of higher sensibility and straightforwardness. Having the choice to control portions of our homes, and for having the segment to respond normally to events, it is twisting up progressively well-known and fundamental due to security and cost purposes. S. Chattoraj proposes to execute a joined home robotization and security structure. The endeavor is dial course of action using down the rack parts to decrease cost and open source programming to get around approving essentials of programming. An Arduino controls sensors and actuators that screen a

portrayed region and make a move reliant on demonstrated parameters like encompassing light, temperature, etc. The Arduino can in like manner send messages in case it recognizes an extraordinary case. The voice affirmation beginning empowers the customer to use voice bearings to control his home [41].

Thriving and security are most tremendous for anything which we have in our well-ordered life, particularly in the home to adjust the effect of gases. Legitimately a-days the effect of nuclear family LPG is developing, LPG trap is correspondingly broadening parallel with it. To keep up a crucial partition from them as routinely as possible checking the gas physically and trap, the purpose of repression of gas in the barrel is constantly watched utilizing a weight sensor load cell. The LPG Detection framework advises the most ideal approach to perceive the spillage utilizing a gas sensor and book another barrel accordingly by building up an association on the working environment [42]. Home automation expects to use PC and information development to control home devices and features. Home frameworks organization is the inside in the execution of a robotization structure for a Smart home. Therefore, every range slant toward electronic control structures most of the Smart home applications is recognized with remote frameworks organization procedures, for instance, ZigBee, Wi-Fi, or radio repeat remote correspondence. The endeavor looks at an insignificant exertion, secure, inescapably accessible, auto-configurable, remotely controlled plan. The approach separated here achieved the goal to control home contraptions remotely using the remote advancement to relate devices and satisfy customer necessities. Wi-Fi advancement has shown to give remote control, home security and is Smart when appeared differently in relation to the officially existing structure [43].

Figure 10 Diagram of Smart kitchen in Homes

R. Kamoda et.al plan to re-distinguish basic supply when it is place into or occupied from an icebox so as to consequently screen basic need stock. The framework proposed utilizing the heap balance includes on a rack in the fridge to reflect both the weight and the situation of basic

supply things. The framework can reidentify basic needs utilizing the heap balance highlight by methods for a model gadget and the two reproduced tests. The exploratory outcomes demonstrate that the heap balance includes permits genuinely exact basic need re-distinguishing proof when basic supply things are put on the heap detecting board in perfect columns. It additionally demonstrates that some staple things could be inaccurately recognized as others even with the heap highlight when one of the basic need things having a comparative load to another is stacked on it [44].

Due to the clamoring lifestyle of current age, they go without spending absurdly on things and organizations that don't add to achieving customer spending plan. If customers are working with confined resources, spending makes it easier to bring home the bacon. It clearly says that an outcome of new advancement there is another thing constantly that appears to buy or be a test for people, so putting aside additional money isn't basic. A couple of individuals consider their spending limit, the anyway bigger part has failed [45].

3 Designing and Fabrication of Smart Kitchen

3.1 Theoretical model

Smart Kitchen – A Measurement framework began off with exploring the writing accessible about the idea that was behind the venture, which is the Internet of things and Home mechanization. The undertaking was gotten from these ideas and the longing to make every day errands accomplished all the more effectively. The reason that the kitchen region was picked to be computerized was on the grounds that it is a zone which is the core of a home. In the event that the procedures done there can be effectively computerized, at that point the remainder of the home can be engaged later on. The thoughts that were looked into by the group were extensively huge in size and functionalities to be executed. There were numerous territories which the group was not ready to cover but rather in the future will hope to create. It must be limited into five principal segments: Food Conveyor Compartment, Automatically controlled Gas Valve Compartment, Sauce Module, Cooker Module, Vegetable Export Module.

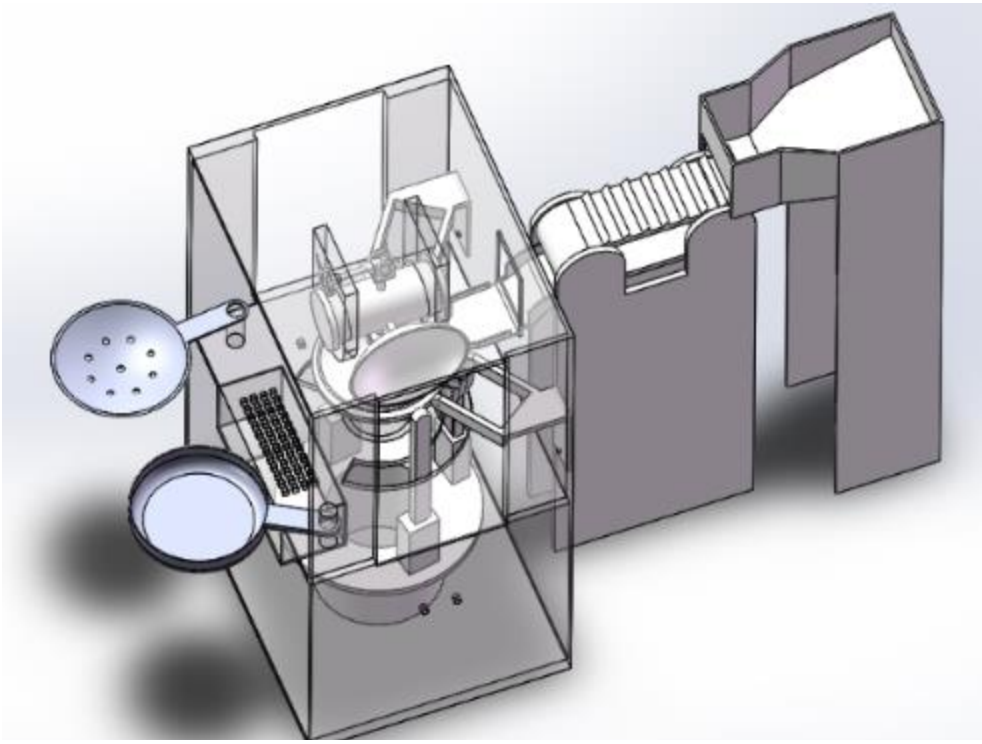

Figure 11 Smart Kitchen 3D Model

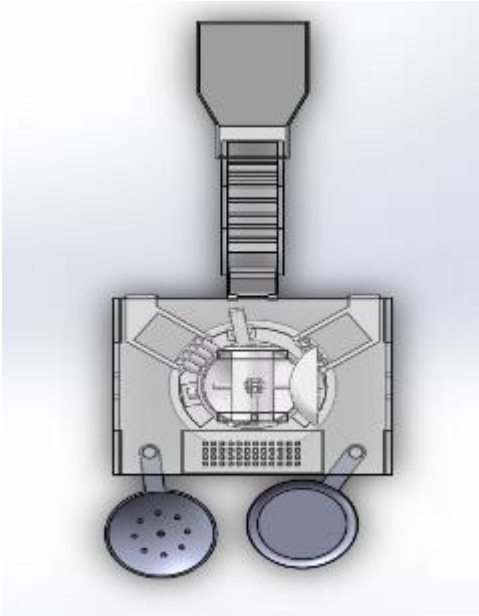

Figure 13 Smart Kitchen Top View

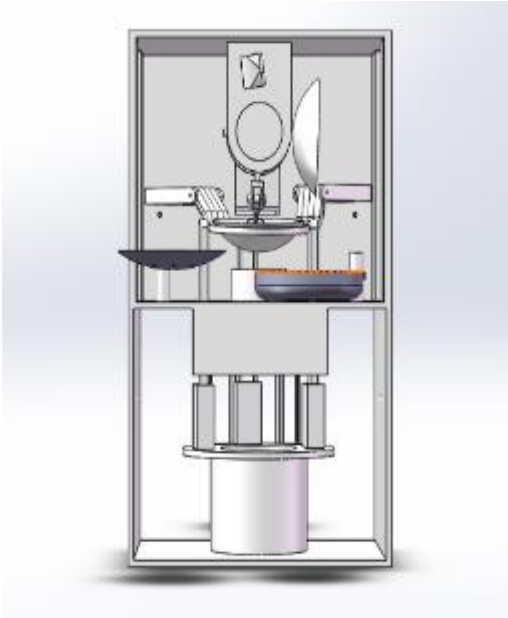

Figure 12 Smart Kitchen Front View

3.1.1 Development of Automatically Controlled Gas Valve

A model of the part is created with the assistance of Google SketchUp as appeared in figure (13). Past existing plans were analyzed and saw to know the structure of the gas valve. Since the motivation behind the part is to control and pivot the stepper motor with the assistance of Arduino to move the gas valve consequently with the motor brush to accomplish a rotational development. The plan created is streamlined and stream neighborly for water medium. The task depends on various factors, for example, Technology, Controlling Finance, User Experience, and User Preferences are the principal factors that add to the Effective Management of a Kitchen.

3.1.2 Theoretical Design of Valve Compartment

To detect food ingredients and cooking methods, we have designed a theoretical design of valve compartments shown in Figure (15,16,17). The design consists of an Arduino UNO microcontroller, a Breadboard, a Stepper Motor, and 12volt batteries and normal Gas Valve. We illustrate the design of our system through a simplified cooking scenario. In general, the first

step of design preparation is to control the Gas Valve with the help of a stepper motor. We assume that all parts are stored in a container or box, in which Arduino UNO is connected with breadboard with the help of male to female and female to male connectors for rotating stepper motor. A stepper-motor gas valve control is disclosed that includes a main diaphragm in a chamber that controllably displaces a valve relative to an opening in response to changes in pressure, to adjust fuel flow through the valve. A servo-regulator diaphragm is provided to regulate flow to the main diaphragm, to thereby control the rate of fuel flow. A stepper motor is configured to move in a stepwise manner to displace the servo-regulator diaphragm, to control fluid flow to the main diaphragm. A controller mounted on the stepper-motor regulated gas valve control receives and converts an input control signal from a heating system to a reference value between 0 and 5 volts, and selects a corresponding motor step value. The control responsively moves the stepper-motor in a stepwise manner to displace the servo-regulator diaphragm and thereby regulates the rate of fuel flow through the valve.

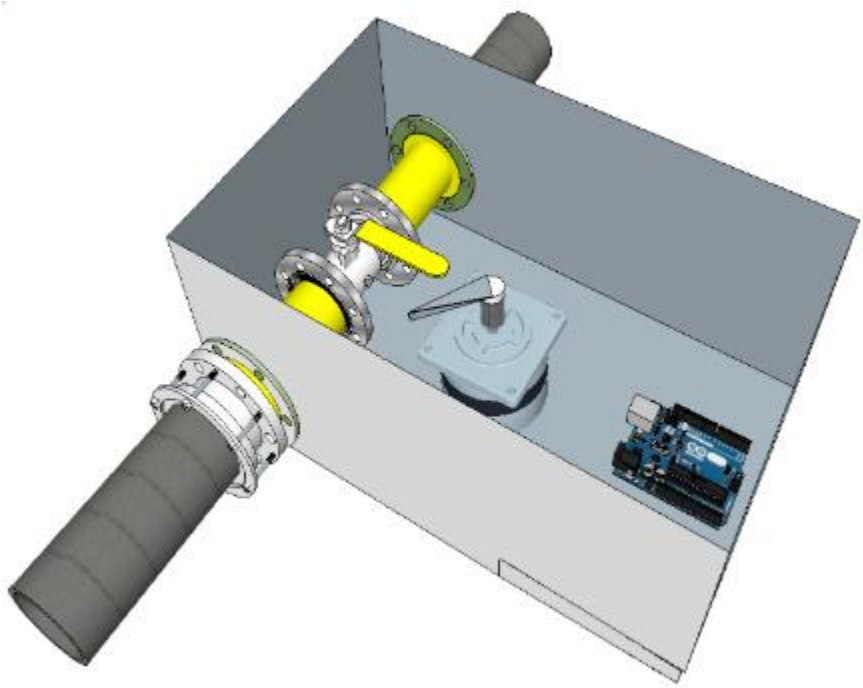

Figure 13 Gas Valve Side View

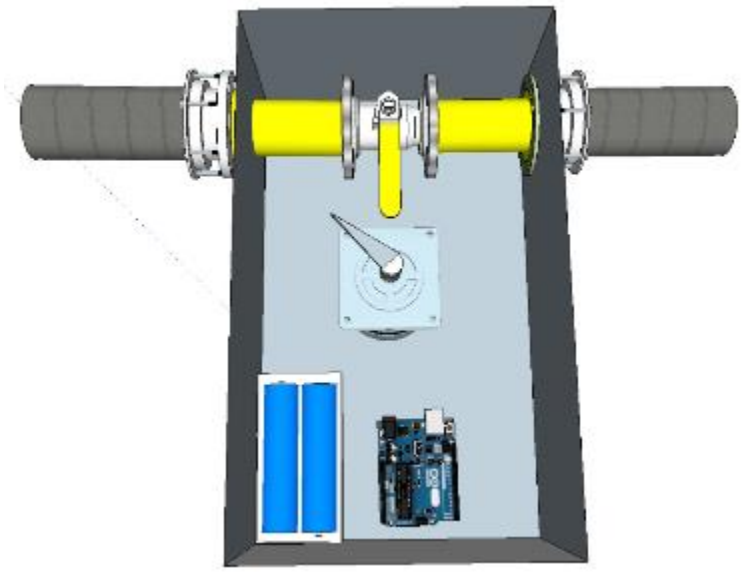

Figure 14 Gas Valve Top View

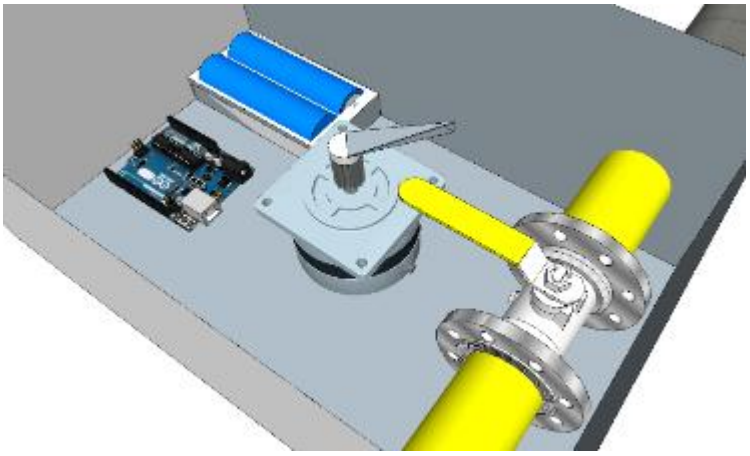

Figure 15 Gas Valve Modified View

The main Features of Stepper Motor are

- small step angle
- high positioning accuracy
- high torque to inertia ratio s
- tapping rate and accuracy

- **Problems**

  The main problem in the above design was we cannot open the full valve at the same time and there was a lot of mechanics which needed more maintenance.

- **Solutions**

  We supplanted the Stepper Motor with the Electromagnets to trim down the utilization of mechanics, this will chop down incessant upkeep. An electromagnet is a magnet that keeps running on power. In contrast to a perpetual magnet, the quality of an electromagnet can without much of a stretch be changed by changing the measure of electric flow that courses through it. The shafts of an electromagnet can even be turned around by switching the progression of power. An electromagnet works on the grounds that an electric flow creates an attractive field. The attractive field created by an electric flow structure's circles around the electric flow has appeared in the chart beneath.

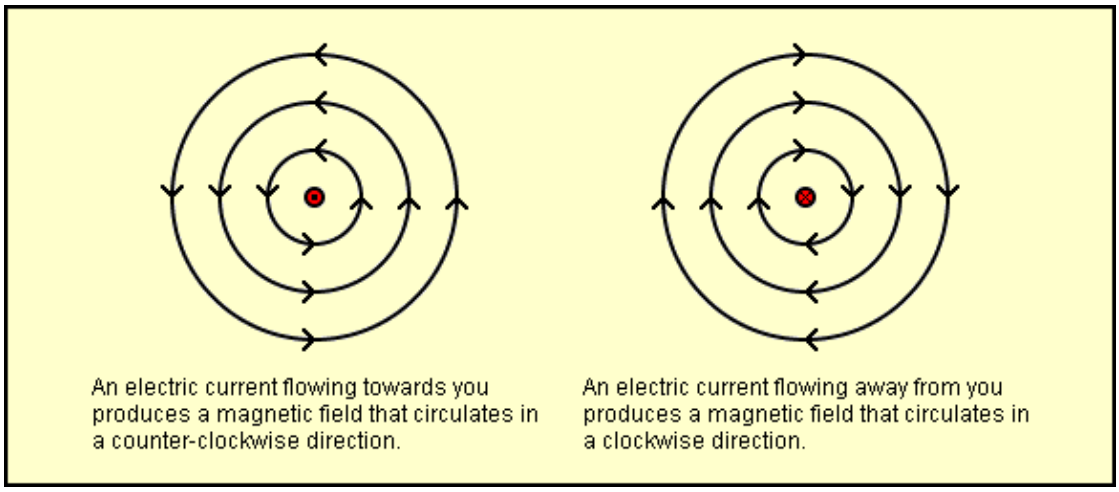

Figure 16 Current Flowing in Electromagnets

3.1.3 Mounting Electromagnets

The plan comprises of an Arduino UNO microcontroller, a Breadboard, Electromagnets, and 12volt batteries and ordinary Gas Valve. We delineate the structure of our framework through a rearranged cooking situation. By and large, the initial step of structure readiness is to control

the Gas Valve with the assistance of 12volt Electromagnets. We expect that all parts are put away in a compartment or box, in which Arduino UNO is associated with breadboard with the assistance of male to female and female to male connectors controlling Electromagnets as appeared in the figure (19,20,21).

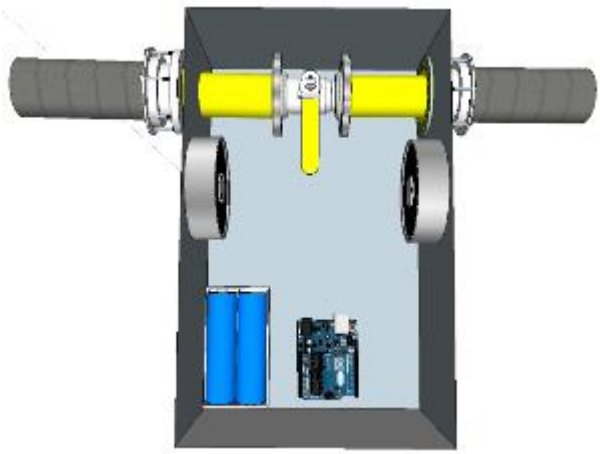

Figure 17 Gas Valve Top View

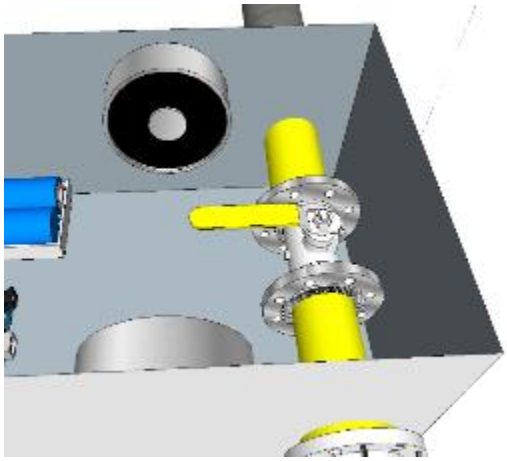

Figure 18 Gas Valve Side View

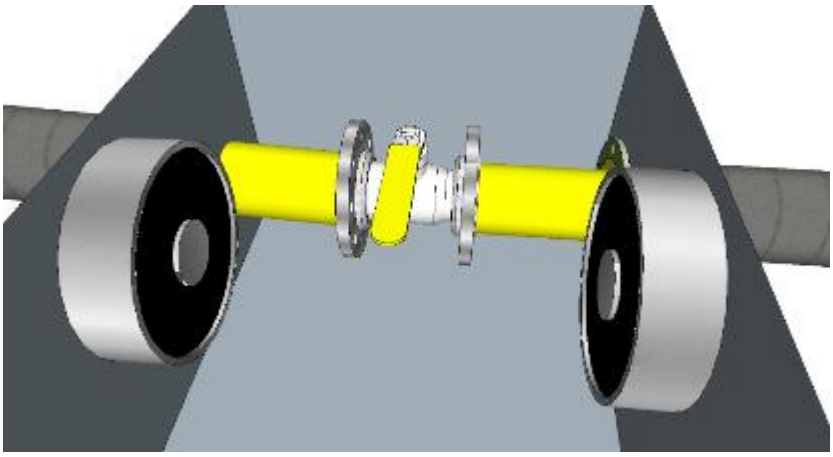

Figure 19 Valve magnified View

- **Problems**

  The principal issue in the above structure was the electromagnets were not powerful enough and couldn't open/close the typical valve appropriately in addition we cannot

open the full valve in the meantime and there was a great deal of mechanics which required more support.

- **Solutions**

  We supplanted the Electromagnets and the current typical Gas Valve with an Electromagnetic Gas. This kind of gas valve utilized a solitary thermocouple. A thermocouple is a gadget made of two unique metals which makes a little electrical charge when warmed toward one side by the gas pilot. This little charge makes an electromagnet inside the gas valve open and enables gas to stream to the primary burners. Since the thermocouple must be warmed before the burner will begin, gas apparatuses regularly have a startup mode, amid which a handle must be discouraged and held for 30 seconds or so in the wake of lighting the pilot. Toward the finish of the 30 seconds, the pilot ought to produce enough power for the valve to work accurately. As of now, the startup handle can be discharged and the valve swung to an "on" position for machine task has appeared in the graph beneath.

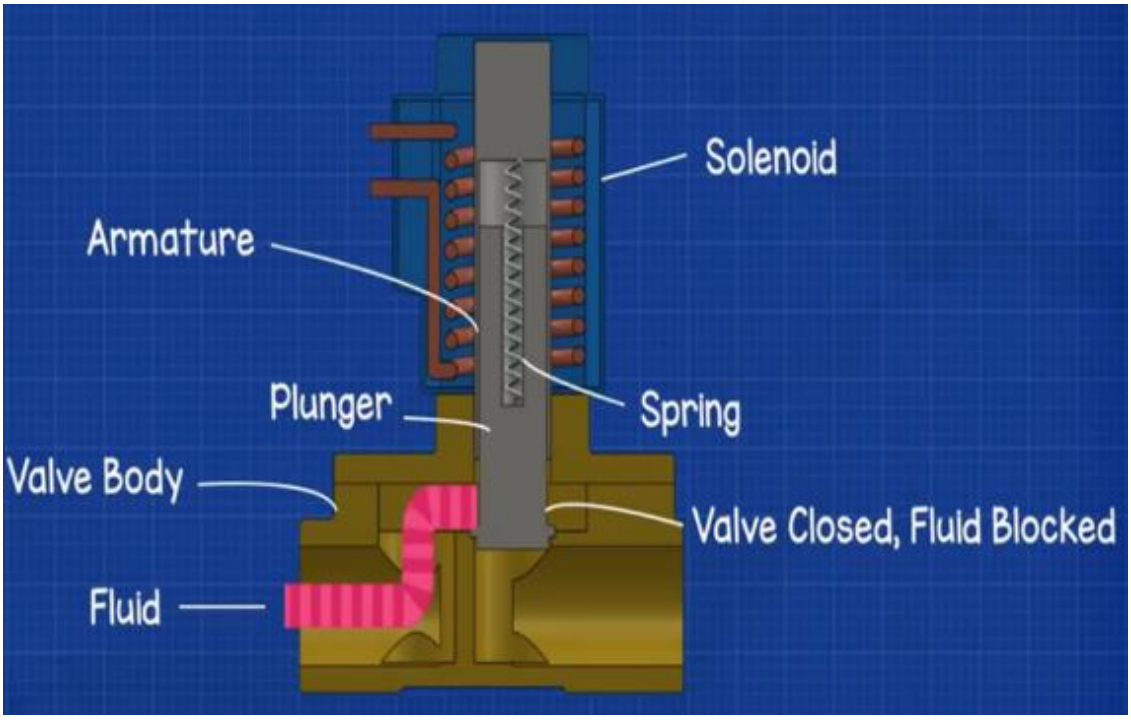

Figure 20 Mechanism in Electromagnetic Gas Valve

3.1.4 Fitting of Gas Flow Sensor

The accompanying plan comprises of an Arduino UNO microcontroller, a Breadboard, Electromagnets, a Gas Flow Sensor and 12volt batteries and typical Gas Valve. We outline the plan of our framework through a disentangled cooking situation. When all is said in done, the initial step of plan planning is to control the Gas Valve with the assistance of 12volt Electromagnets and a Gas Flow Sensor to decide the water stream rate. We accept that all parts are put away in a compartment or box, in which Arduino UNO is associated with breadboard with the assistance of male to female and female to male connectors controlling Electromagnets as appeared in the figure (23,24,25). This sensor sits in accordance with your gas line and contains a pinwheel sensor to quantify how much gas has traveled through it. There's a coordinated attractive corridor impact sensor that yields an electrical heartbeat with each insurgency. The corridor impact sensor is fixed from the gas pipe and enables the sensor to remain sheltered and dry. The Gas Flow Sensor for Flow Rate and Volume Measurement utilizing Arduino deals with the guideline of the Hall impact. As per the Hall impact, a voltage distinction is prompted in a conveyor transverse to the electric flow and the attractive field opposite to it. Here, the Hall impact is used in the stream meter utilizing a little fan/propeller-formed rotor, which is put in the way of the fluid streaming.

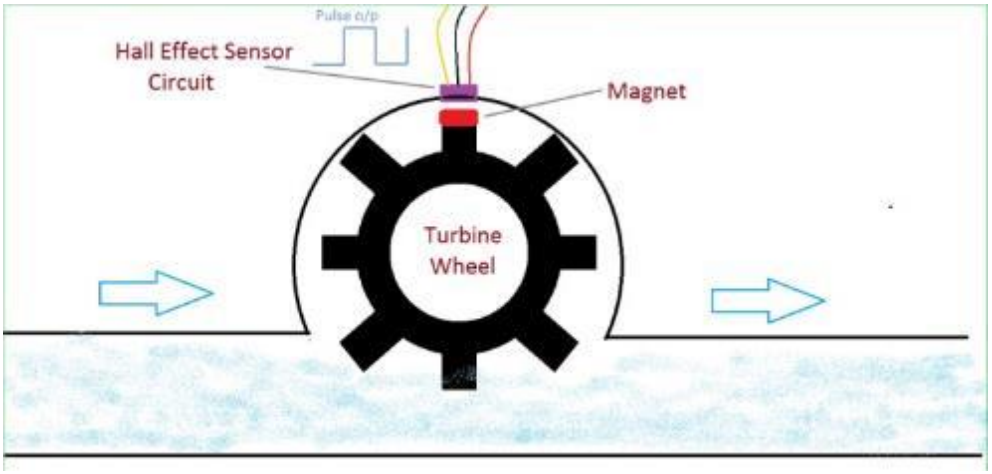

Figure 21 Mechanism in Water Flow Sensor

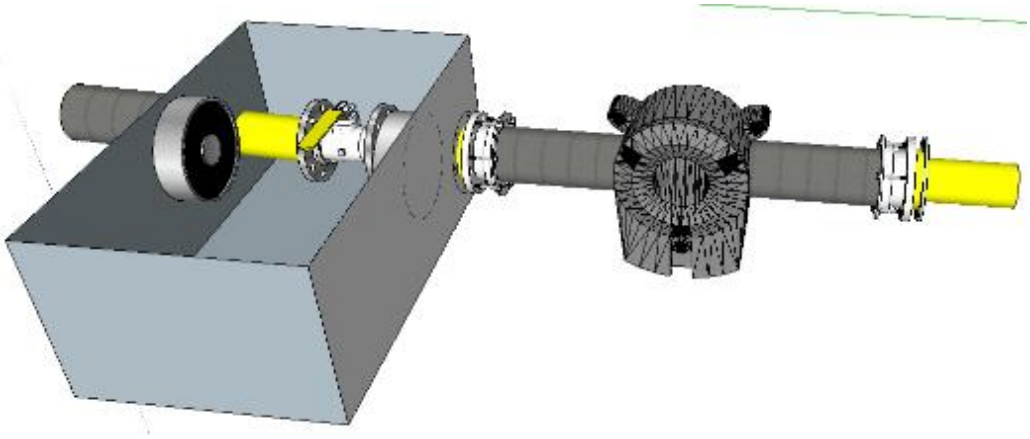

Figure 22 Gas Valve Isometric View

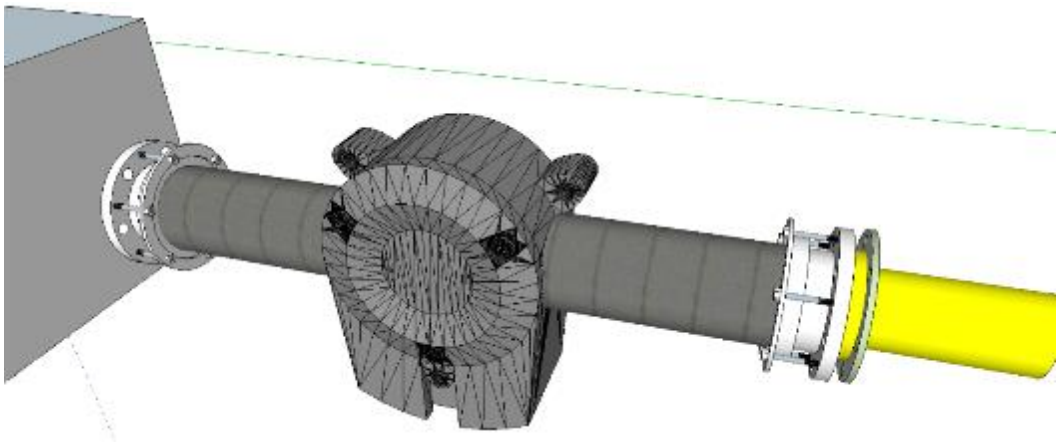

Figure 23 Gas Valve magnified View

The main Features of Gas Flow Sensor are

- Model: YF-S201
- Sensor Type: Hall effect
- Working Voltage: 5 to 18V DC (min tested working voltage 4.5V)
- Max current draw: 15mA @ 5V
- Output Type: 5V TTL

- Working Temperature range: -25 to +80℃
- Working Humidity Range: 35%-80% RH
- Accuracy: ±10%
- Output duty cycle: 50% +-10%
- Output rise time: 0.04us
- Output fall time: 0.18us
- Flow rate pulse characteristics: Frequency (Hz) = 7.5 * Flow rate (L/min)
- Durability: minimum 300,000 cycles

3.2 Final Design of Valve Compartment

To identify nourishment fixings and cooking techniques, we have structured a theoretical plan of valve compartments appeared in Figure (26). The structure comprises of an Arduino UNO microcontroller, a Breadboard, an Electromagnetic Gas Valve, Water Flow Sensor, 12volt batteries and an LCD Display. We represent the plan of our framework through a rearranged cooking situation. When all is said in done, the initial step of plan planning is to control the Electromagnetic Gas Valve with the assistance of an Arduino UNO. We accept that all parts are put away in a folder or box, in which Arduino UNO is associated with breadboard with the assistance of male to female and female to male connectors for turning stepper engine. Solenoid valves are likewise described by how they work. A little solenoid can produce a restricted power. In the event that that power is adequate to open and close the valve, at that point an immediate acting solenoid valve is conceivable. An estimated connection between the required solenoid power Fs, the liquid weight P, and the opening zone A for an immediate acting solenoid valve is {\display style F_{s}=PA=P\pi d^ {2}/4} F_{s}=PA=P\pi d^ {2}/4.

Where d is the hole width. A run of the mill solenoid power may be 15 N (3.4 lbs.). An application may be a low weight (e.g., 10 psi (69 kPa)) gas with a little hole distance across (e.g., 3⁄8 in (9.5 mm) for an opening region of 0.11 in2 (7.1×10−5 m2) and estimated power of 1.1 lbf (4.9 N)).The main Features of Electromagnetic Gas Valves are.

- External leakage is plugged, internal leakage is easy to control, safe to use.
- The system is simple, easy access to computers, the price is low.

- Action is express, power is small, appearance is light.
- Regulation accuracy is limited, the applicable medium is limited.
- Various models, a wide range of use.

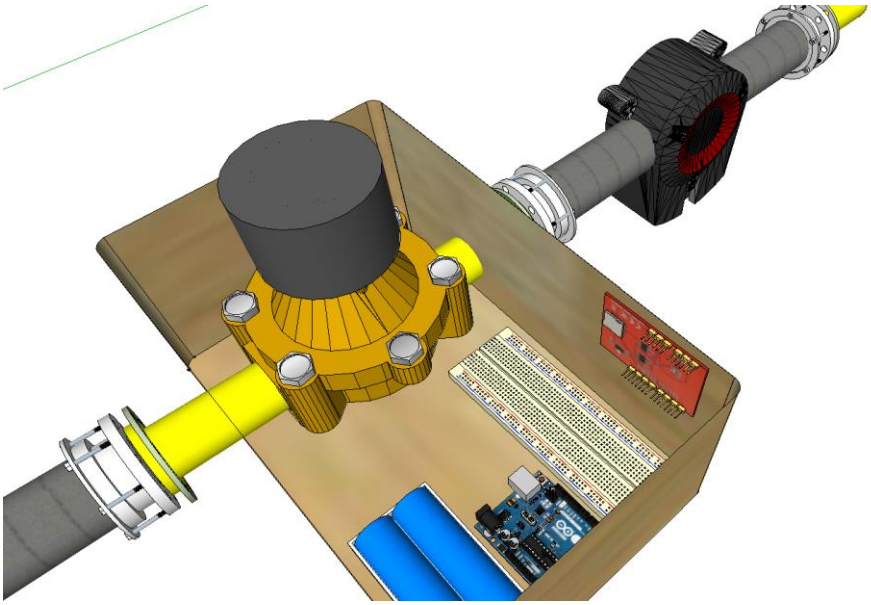

Figure 24 Gas Valve Isometric View

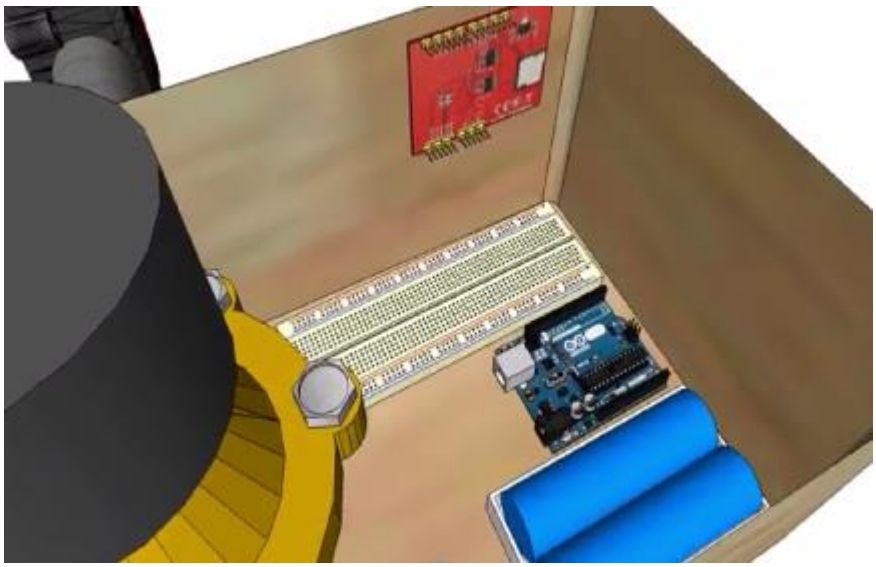

Figure 27 Gas Valve Modified View

3.2.1 Mounting an LCD Display

LCD (Liquid Crystal Display) screen is an electronic showcase module and locates a wide scope of utilization. A 16x2 LCD show is exceptionally essential module and is all around regularly utilized in different gadgets and circuits. These modules are favored more than seven sections and other multi-portion LEDs. The reasons being: LCDs are affordable; effectively programmable; have no confinement of showing extraordinary and even custom characters (dissimilar to in seven fragments), activities, etc. To distinguish nourishment fixings and cooking techniques, we have structured a theoretical plan of valve compartments appeared in Figure (27). The structure comprises of an Arduino UNO microcontroller, a Breadboard, an Electromagnetic Gas Valve, Water Flow Sensor, 12volt batteries and an LCD Display to show the Gas Flow rate. We show the structure of our framework through a rearranged cooking situation. When all is said in done, the initial step of structure readiness is to control the Electromagnetic Gas Valve with the assistance of an Arduino UNO. We accept that all parts are put away in a holder or box, in which Arduino UNO is associated with breadboard with the assistance of male to female and female to male connectors for pivoting stepper engine. Here's an outline of the pins on the LCD I'm utilizing. The associations from each pin to the Arduino will be the equivalent, yet pins may be masterminded contrastingly on the LCD. Check the datasheet or search for names on your LCD. A 16x2 LCD implies it can show 16 characters for every line and there are 2 such lines. In this LCD each character is shown in 5x7 pixel lattice. This LCD has two registers, in particular, Command and Data.

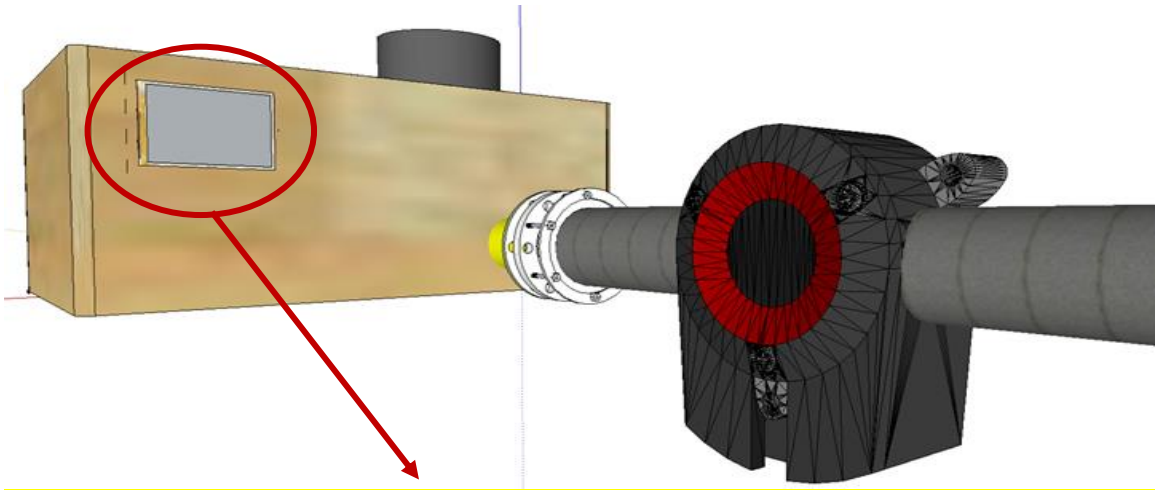

Figure 28 LCD Display Side View

The main Features of 12x2 LCD Display are

- Display construction 16 Characters * 2 Lines
- Display mode STN(Y/G)
- Display type Positive Transmissive
- Backlight LED/5.0V(Y/G)
- Viewing direction 6 o'clock
- Operating temperature 0 to 50°C
- Storage temperature -10 to 60°C
- Controller SPLC780D or Equivalence
- Driving voltage Single power
- Driving method 1/16 duty, 1/5 bias
- Type COB (Chip on Board)
- Number of data line 6800 4/8-bit parallel
- Connector PIN

4 Experiments

Experiments performed after fruitful planning and printing of the Smart kitchen. The potential results can't be sure for the occasion, as not many tests have been finished with Smart kitchens to date. The normal results I see is to make a gadget that can control the gas valve in stove consequently. The security for such delicate items will be tried to maintain a strategic distance from any harm which may hurt the client or the article tried.

The undertaking utilizes the prototyping strategy to build up the framework and testing will be done also. Fundamentally, the hardest piece of the task was done first and bit by bit moved onto the little pieces of the undertaking. The equipment segments should be obtained and checked whether they are working appropriately. At that point move onto the testing the equipment and check for blunders. After the equipment has been checked the arranging stage was finished and the task moved onto the plan organize, this is the place the product interfaces were planned alongside the whole framework configuration was finished. The principle parts and components include.

- Arduino UNO Microcontroller
- Breadboard
- Stepper Motor
- Electromagnetic Solenoid Gas Valve
- TIP120 Transistor MOFSET
- YwRobot Breadboard Power Supply
- 4 Channel Relay Module
- Diodes
- IR (Infrared) Temperature Sensor
- 12x2 LCD Display
- Gas Flow Sensor
- Potential Meter
- Jumper Wires
- 12V DC Power Supply

- 9V DC Power Supply

4.1 Connection of Components

To connect the components with Arduino and digital pins, the following experiments were conducted.

4.1.1 Experiment 1 (Connecting the Stepper Motor)

A stepper motor isolates a full pivot in numerous means. Thus, a stepper motor can be driven considerably more decisively than a regular DC motor. Specifically, stepper motors are driven well ordered. Subsequent to having a brisk investigate the information sheet of a stepper, we realize precisely what a number of degrees related to a solitary advance of our engine. With this data, we can decisively turn the rotor of our stepper engine, since we at that point realize what number of degrees related to a solitary advance.

The 28BYJ-48 is an exceptionally shoddy stepper motor that frequently accompanies a ULN2003A driver board. Fortunately, the Arduino stage has as of now a worked in stepper library that enables us to control the 28BYJ-48 stepper motor with the ULN2003A driver board. In this instructional exercise, it has appeared at control the 28BYJ-48 with an Arduino UNO. List of components are.

- Arduino Nano
- Jumper wires
- 28BYJ-48 stepper motor
- ULN2003A driver board

Regularly, the 28BYJ-48 motor accompanies a 5-pin connector that fits the driver board's connector. The driver board has two pins for the power supply which are marked GND and VCC. The board's GND pin must be wired to the Arduino's GND pin. As needs are, the board's VCC pin must be associated with the Arduino's 5V pin.

With this setup, we are fueling the motor legitimately from the Arduino. The preferred standpoint is this is the conceivable simplest answer for giving the capacity to the engine. Be

that as it may, if the motor devours a lot of intensity, the Arduino can be for all time harmed. On the off chance that you utilize an alternate setup (driver, engine, source code, and so forth.), ensure that you don't draw more than about 300mA out of the Arduino. In the event that you need more power, simply utilize an outside voltage supply for your driver board.

In conclusion, the driver board's IN1, IN2, IN3, and IN4 pins must be associated with the Arduino. In this instructional exercise, pins 8 to 11 of the Arduino are utilized (IN1<->8, IN2 <-> 9, IN3 <-> 10, IN4 <-> 11).

Circuit outline of the stepper motor with Arduino is as per the following.

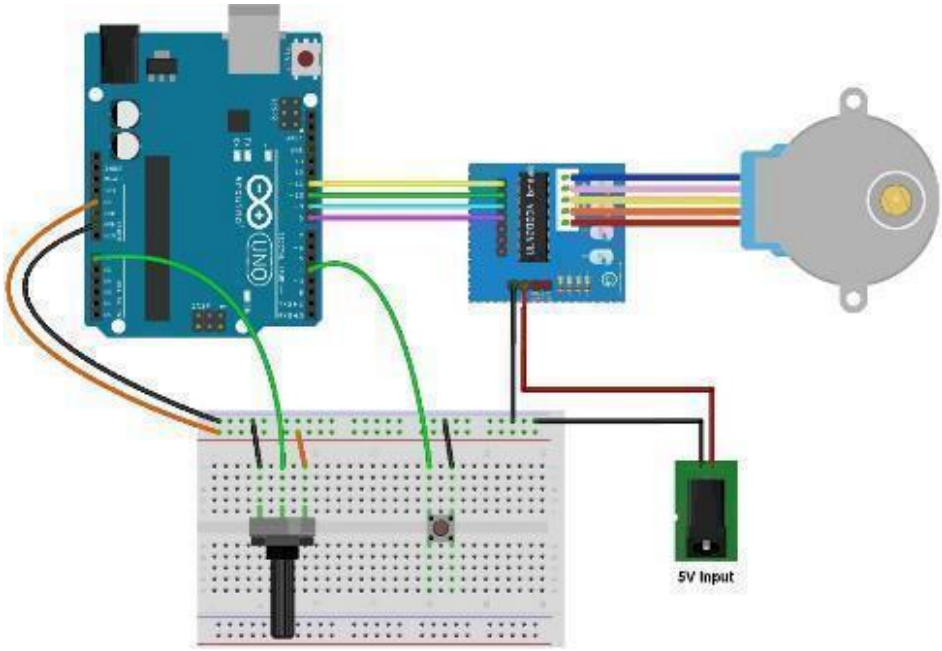

Figure 29 Circuit Diagram of Stepper Motor connected with Arduino

The Pictures were taken after the above experiment are as follows.

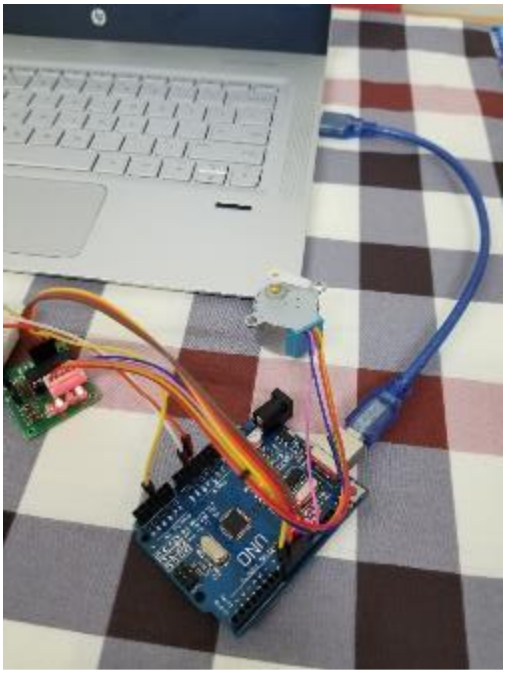

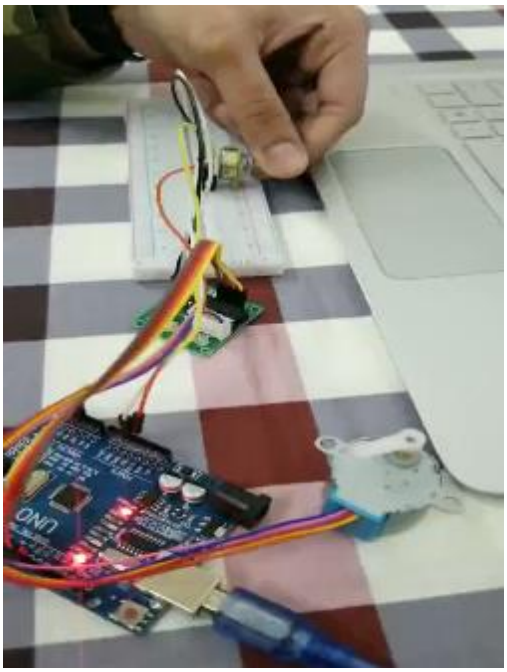

Figure 30 Rotating Stepper Motor with Arduino

4.1.2 Experiment 2 (Connecting an LCD Display)

The LCD I'm utilizing is a 16×2 LCD Display. The part 16×2 implies that the LCD has 2 lines, and can show 16 characters for every line. In this way, a 16×2 LCD screen can show up to 32 characters on the double. It is conceivable to show in excess of 32 characters with looking over, however.

The code in this article is composed of LCD's that utilization the standard Hitachi HD44780 driver. On the off chance that your LCD has 16 pins, at that point, it most likely has the Hitachi HD44780 driver. These Displays can be wired in either 4-bit mode or 8-bit mode. Wiring the LCD in 4-bit mode is normally favored since it utilizes four fewer wires than 8-bit mode. By and by, there is certifiably not a discernible contrast in execution between the two modes. In this instructional exercise, I'll interface the LCD in 4-bit mode. Here's a chart of the pins on the LCD I'm utilizing. The associations from each pin to the Arduino will be the equivalent.

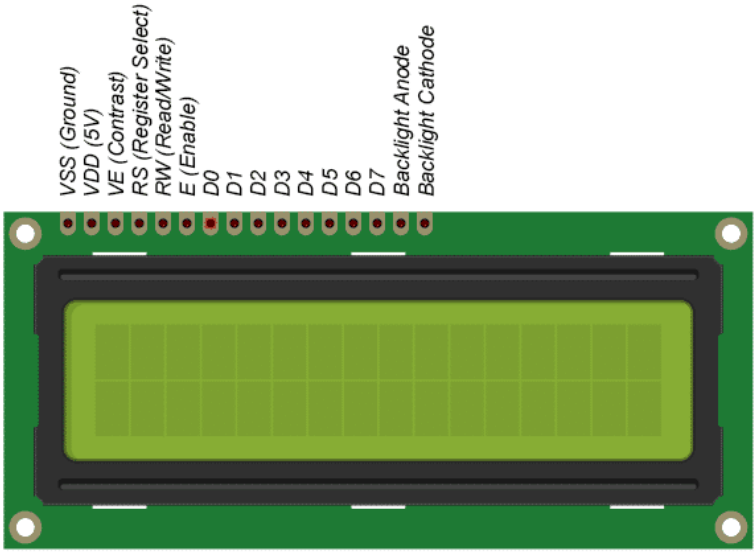

Figure 31 Pins on 12x2 LCD Display

List of components used is as follows.

- Arduino UNO
- 12x2 LCD Display
- Jumper Wires
- Potentiometer to adjust the contrast

Also, we solder a 16 pin header to the LCD before connecting it to a breadboard. Circuit diagram of the LCD Display connected with Arduino is as follows.

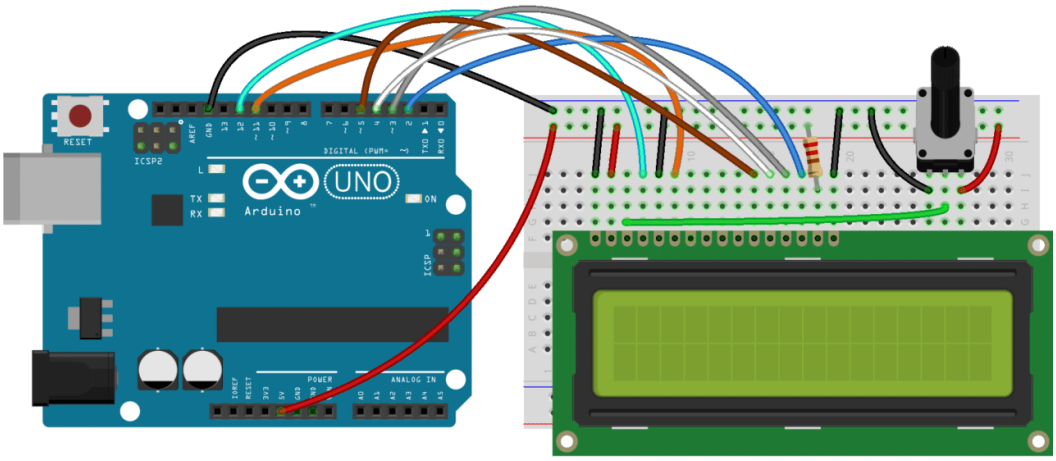

Figure 32 Circuit Diagram of 12x2 LCD Display connected with Arduino

The Pictures were taken after the above experiment are as follows.

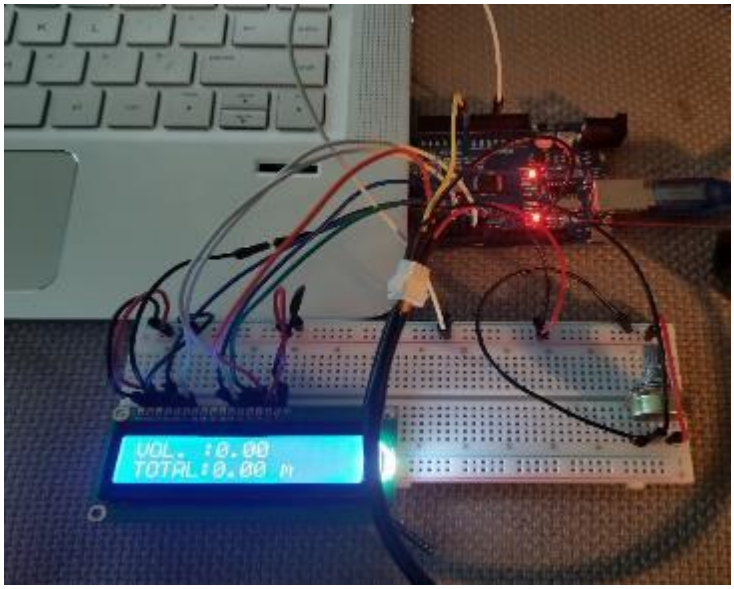

Figure 33 LCD Display connected with Arduino

4.1.3 Experiment 3 (Connecting the Gas Flow Sensor)

This sensor sits in accordance with gas line and contains a pinwheel sensor to quantify how much fluid has traveled through it. There's a coordinated attractive lobby impact sensor that

yields an electrical heartbeat with each upset. The lobby impact sensor is fixed from the gas pipe and enables the sensor to remain protected and dry. This kind of sensor can be found on various distances across, gas stream rate (m/s) ranges. Choosing one that will cover needs.

The sensor accompanies three wires: red (5-24VDC power), dark (ground) and yellow (Hall impact beat yield). By checking the beats from the yield of the sensor, you can without much of a stretch figure water stream. Each heartbeat is around 2.25 milliliters. Note this isn't an exactness sensor, and the beat rate varies a bit relying upon the stream rate, gas weight, and sensor direction. It will require cautious adjustment if superior to anything 10% exactness is required. Be that as it may, it's incredible for deciding the gas stream rate. List of components used is as follows.

- Arduino UNO
- Water flow sensor
- 3 breadboard cables
- Jumper Wires
- Air Blow Dryer

Circuit diagram of the Gas Flow Sensor connected with Arduino is as follows.

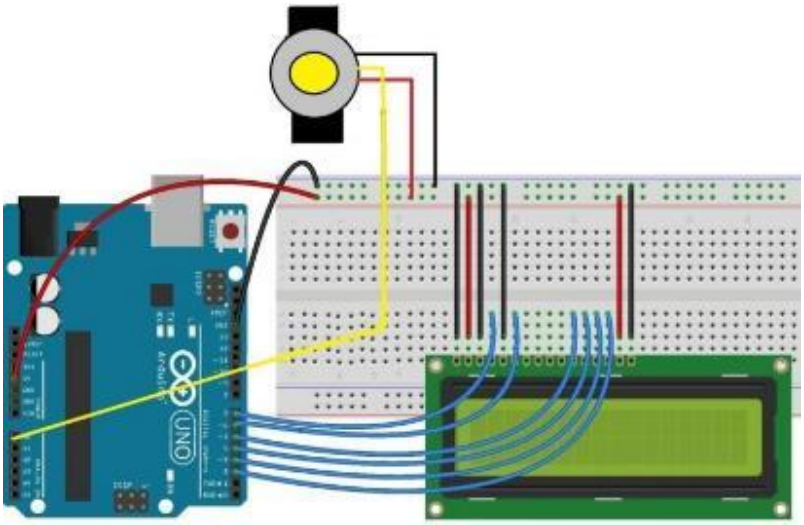

Figure 34 Circuit Diagram of Gas Flow Sensor connected with Arduino

The Pictures were taken after the above experiment are as follows.

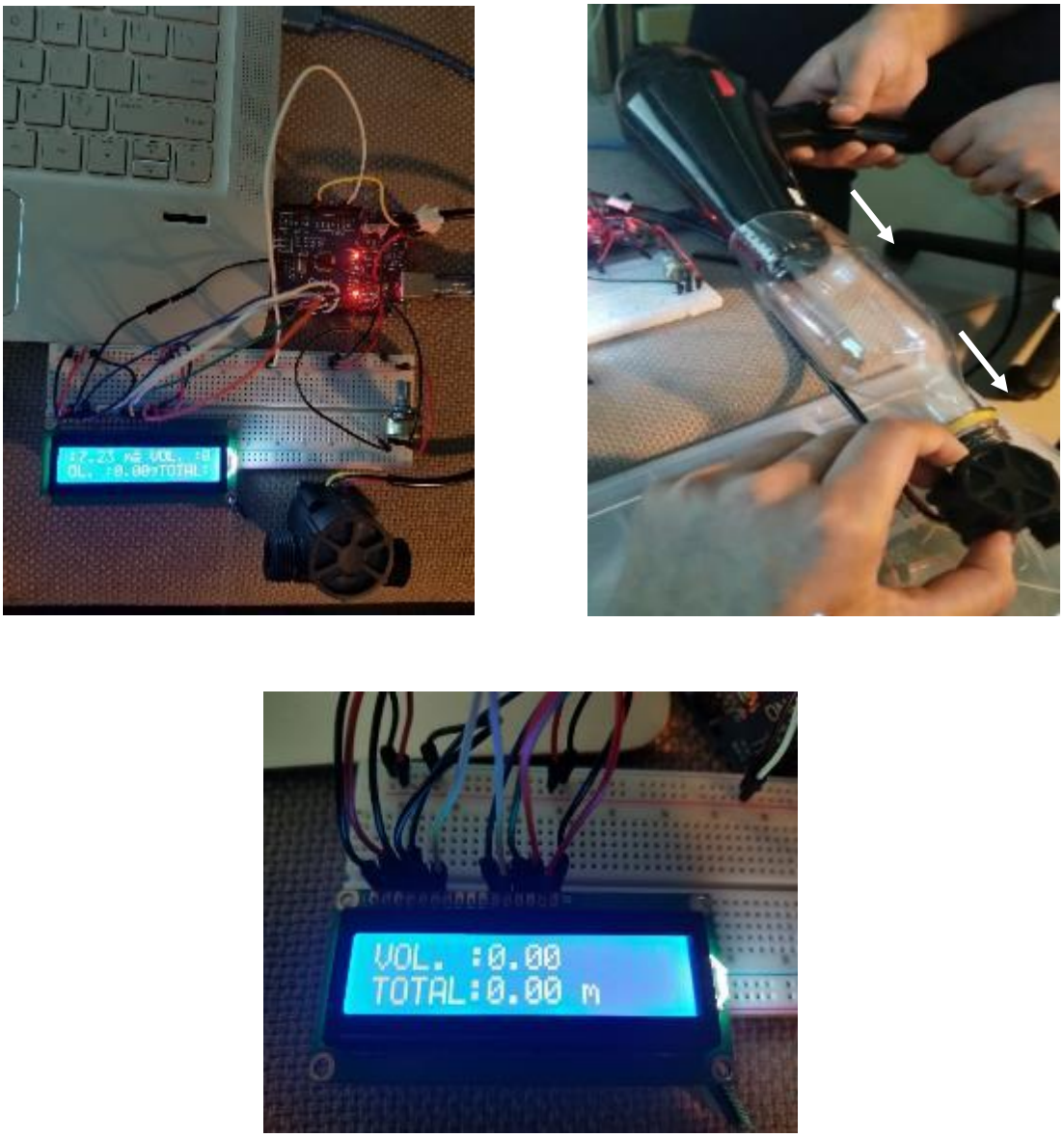

Figure 35 Determining Gas Flow Rate

4.1.3 Experiment 4 (Connecting IR Temperature Sensor)

In this experiment, I will connect GY-906-BCC MLX90614ESF-BCC IR Temperature Sensor with the 12x2 LCD Display. The 12x2 LCD Display is one of my preferred Display for Arduino ventures, seeing the showcase in a shield form was the coolest thing. I couldn't avoid it in light

of the fact that having it in a shield structure removes the requirement for wires and decreases the odds of blunders.

- The GY-906-BCC MLX90614ESF-BCC IR Temperature Sensor is an infrared temperature sensor for non-contact temperature estimation. It can quantify temperatures inside the scope of - 70 to 380 degree Celsius with an exactness of about 0.5degree in room temperature. A portion of the highlights of this sensor is recorded beneath. Little size and ease
- Easy to coordinate
- Factory aligned in wide temperature extend: - 40 to 125°C for sensor temperature and - 70 to 380°C for article temperature
- High precision of 0.5°C over a wide temperature extend (0. +50 C for both Ta and To)
- Measurement goals of 0.02°C
- Single and double zone renditions
- SMBus perfect computerized interface for quick temperature readings and building sensor systems
- Customizable PWM yield for consistent perusing
- Available in 3V and 5V forms

The IR Sensor is capable of measuring the temperature of an object without touching it, from a small distance. List of components I am using are.

- Arduino UNO
- GY-906-BCC MLX90614ESF-BCC IR Temperature Sensor
- 12x2 LCD Display
- Jumper Wires
- Lighter

LCD Display comes as a shield so it connects legitimately to the Arduino. The Display shield has every one of the pins of the Arduino UNO broken out so it makes it simple to associate different segments to the Arduino even in the wake of interfacing the showcase. The association between the Arduino and the IR temperature sensor has appeared in the schematic's underneath.

Circuit diagram of the IR (Infrared) Temperature Sensor connected with Arduino is as follows.

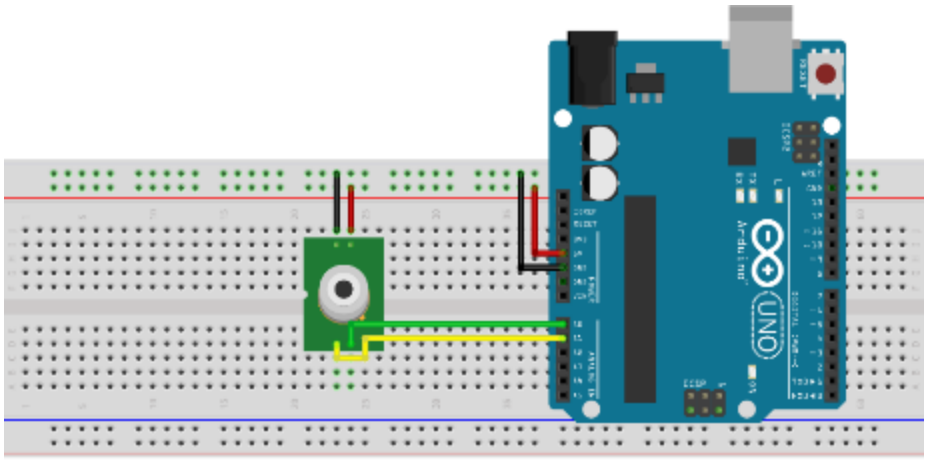

Figure 36 Circuit Diagram of IR (infrared) Sensor Connected with Arduino

The Pictures were taken after the above experiment are as follows.

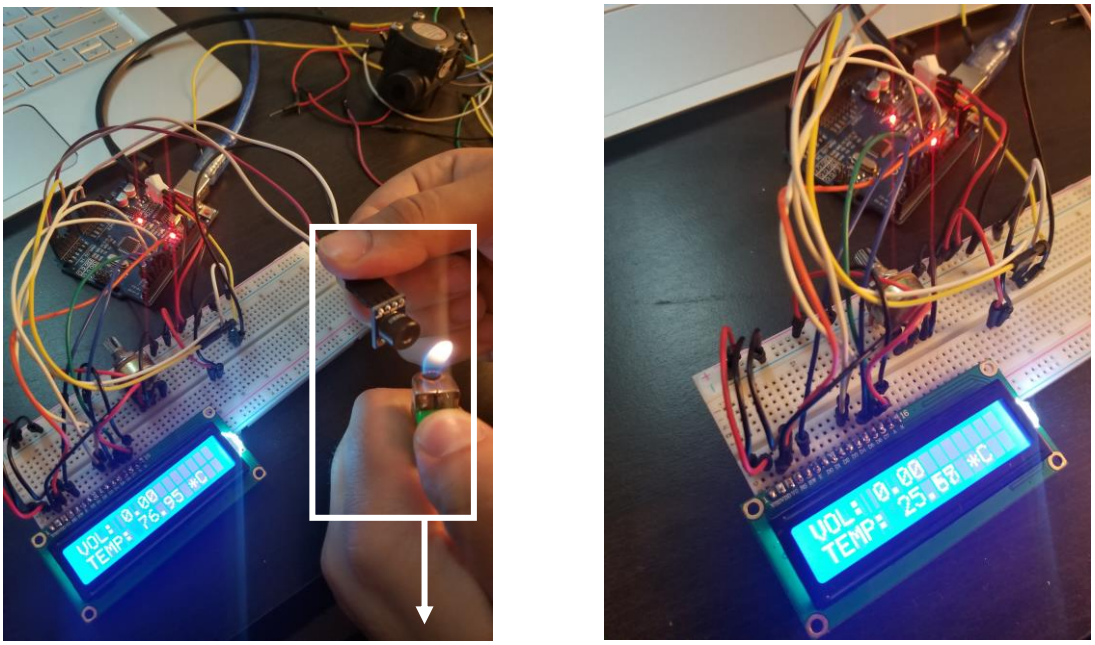

Figure 37 Determining Temperature with IR Sensor

4.1.4 Experiment 5 (Connecting Electromagnetic Gas Valve)

We required a 12-volt Power supply to run the Electromagnetic Gas Valve, I am utilizing a DC control Adapter since the Arduino isn't sufficiently amazing to drive it. In the accompanying trial when control is connected to the Gas Valve, we saw the curve thing occurs and it flashes when we contact the wires, that is an issue it brought about by back EMF. The back EMF happened when we all of a sudden stopped the present streaming in any solenoid (transfer, engine, siphon, electromagnet, inductor, otherwise known as anything with a looped wire in it), the attractive field fallen and make a contradicting current (going the incorrect way) with a voltage being ordinarily the first voltage. This is probably going to broil any IC regardless of the brief length of the voltage spike. which appeared in the figure (38) as follows.

Figure 38 Sparking between the Power supply and the Electromagnetic Valve

components I am using in the experiment are as follows.

- Arduino UNO
- DC 12V Power Supply

- DC 9V Power Supply
- MB102 YwRobot Power supply for breadboard
- 4 Relay Module
- Electromagnetic Valve
- Fly back Diode
- Jumper Wires
- Breadboard

The Pictures were taken after the experiment are as follows.

Valve did not wok

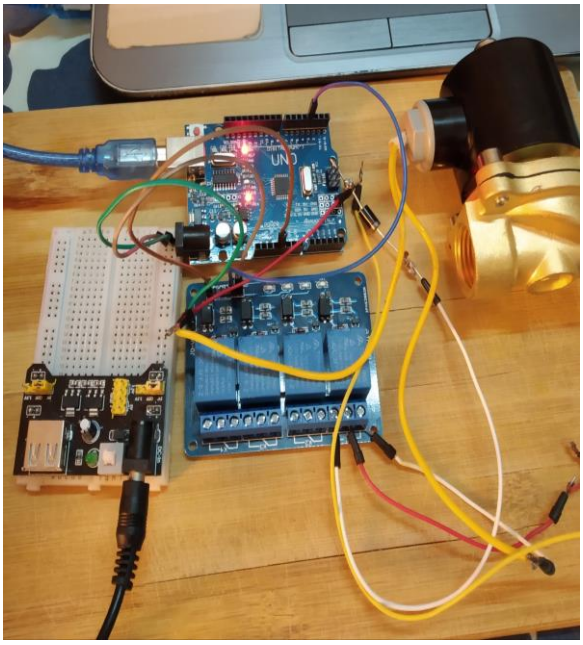

12V DC ↓ 9V DC ↓

Figure 39 (a) Electromagnetic Valve connected with Arduino

When in doubt, we never legitimately associated any circuit to any inductive burden without some sort of security from back EMF. Fly back Diode is one of the strategies to maintain a strategic distance from harm brought about by back EMF is to utilize a fly back diode that will redirect the beat far from your IC (once more into the loop really). Be that as it may, we can't utilize the fly back diode with a peristaltic siphon as somebody would need to turn around the

diode depending if the siphon is utilized in forward or switch siphoning.

Electromagnetic valve is simply a valve constrained by an electromagnet. It is, as transfers and engines, an inductive burden (otherwise known as an IC buster, go read on back EMF in the event that it isn't as of now done!). They more often than not come in two flavors: Normally Open or Normally Closed. Typically alludes to when-there-is-no-current-in-the-solenoid. On the off chance that we place gas in an NC (Normally Closed) solenoid valve, gas will be blocked. In the event that you control the magnet with the normal current/voltage, the valve will open and the gas will stream. Presently, this isn't the main variable. At the point when current is streaming in the magnet, it makes heat. Most solenoid valves are not for ceaseless use. They need to rest and chill off between utilizations or they will sear. We Read the little prints before obtaining. More or less. After the last trial failed, I concocted another thought and endeavored to utilize a transistor. Rundown of parts I am utilizing in the following investigation is.

- Arduino UNO
- Electromagnetic Valve
- A DC 12V Power Supply
- TIP120 Transistor MOFSET
- An LED (Red color)
- Resistor
- Fly back Diode
- Jumper Wires
- Breadboard

A MOSFET resembles a light switch. we connected some voltage to the GATE terminal and the obstruction between the DRAIN and the SOURCE dropped, enabling a great deal of current to pass. Warmth produced by the minor (yet genuine) inner opposition and we expected to discard it or hazard dissolving the MOSFET. Additionally, by configuration, nothing is flawless, they are very powerless against electricity produced via friction. In the collecting of the stuff, I associated the grounded and release all electricity produced via friction we could have. We place MOSFET in the breadboard. The TO-220 bundling required a little push to get the leads in the breadboard. With the dark piece of the MOSFET (with the composition) confronting me,

the pin on the left is the GATE, the one in the center is the DRAIN and the one on the privilege is the SOURCE. I associated Arduino advanced pin 2 to the GATE, interface the positive terminal of the 12V battery to the positive side of the electromagnetic valve, interface the negative terminal of the solenoid to the DRAIN, the SOURCE to the negative terminal of the battery, we utilized a LED and stacked the LED in the breadboard at that point pin the resistor in the breadboard, associated the resistor to Arduino computerized pin 10 and associate the negative terminal of an LED to GND. At that point we associated the Diode between the solenoid terminals, so the little line on the diode is nearest to the positive terminal of the solenoid. I chose to put the diode exceptionally near the solenoid in light of the fact that:

- There are two very convenient little holes waiting for the diode in the crimps;
- I remembered reading something about putting diodes as close as possible to the inductive load

The pictures taken of the above experiment are as follows.

LED blinks when valve open

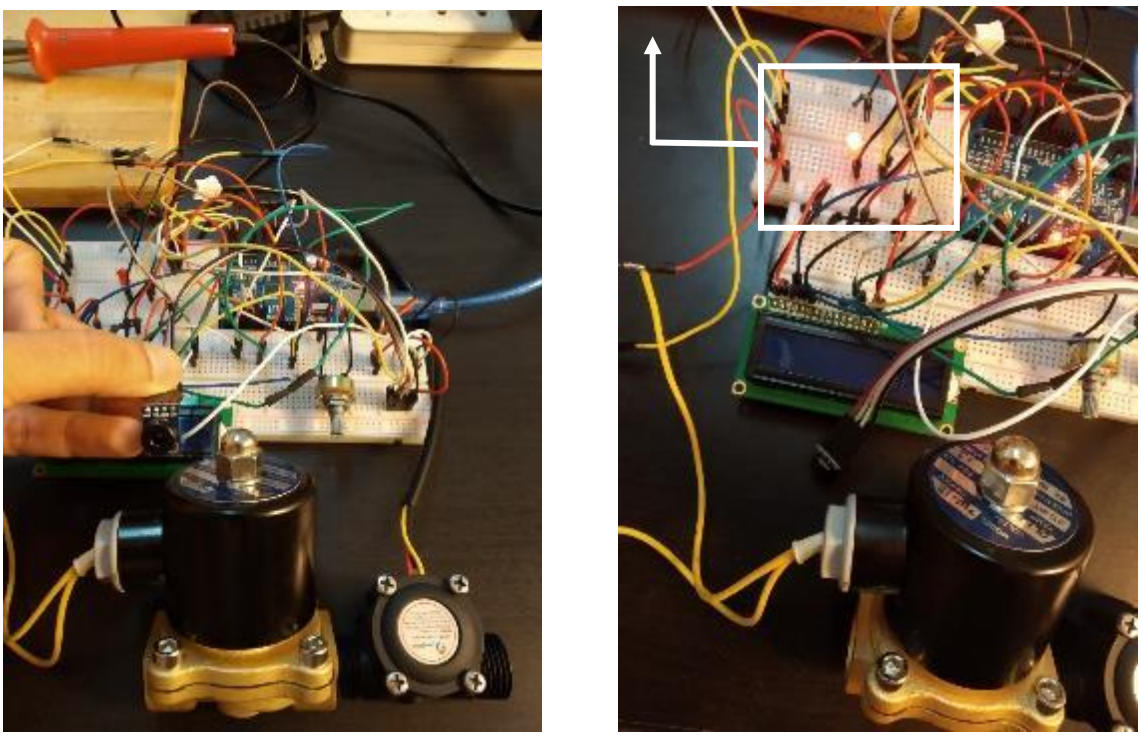

Figure 40 (b) Electromagnetic Valve Connected with Arduino

The connection between the Arduino and the Electromagnetic Gas Valve is shown in the schematics below.

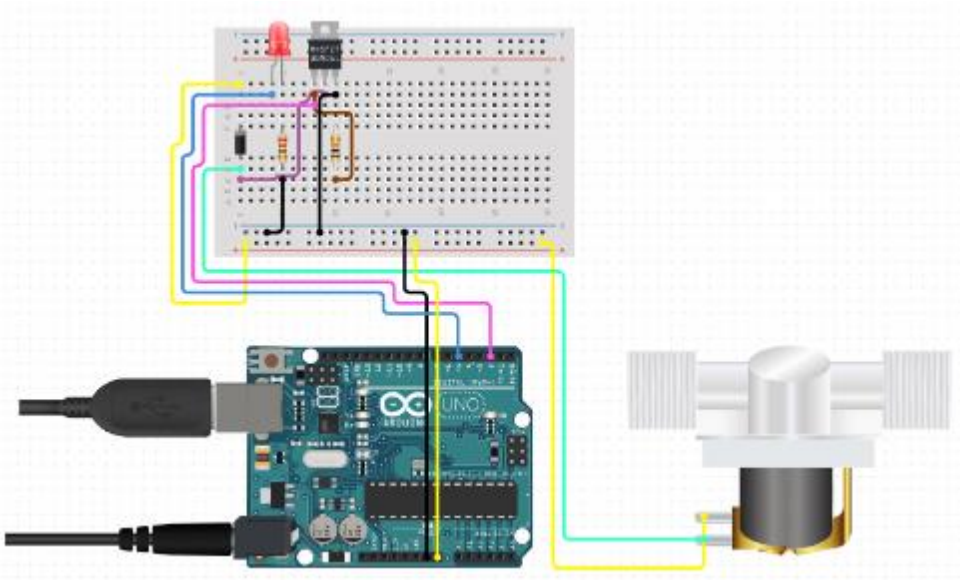

Figure 41 Circuit Diagram of Electromagnetic Valve connected with Arduino

4.2 Programming Using Arduino IDE

Arduino is an open-source equipment organize subject to easy to-use hardware and programming. Arduino sheets can examine inputs - light on a sensor, a finger on a catch, or a Twitter message - and change it into a yield - authorizing a motor, turning on a LED, conveying something on the web. You can control your board by sending a great deal of headings to the microcontroller on the board. To do all things considered you use the Arduino programming language (in perspective on Wiring), and the Arduino Software (IDE), in light of Processing.

During the time Arduino has been the brain of thousands of undertakings, from common things to complex sensible instruments. A general system of makers - understudies, masters, skilled workers, designers, and specialists - has aggregated around this open-source organize, their duties have implied an incredible proportion of accessible data that can be of phenomenal help to juveniles and experts alike. The principal Benefits of using Arduino are.

- Inexpensive - Arduino sheets are commonly unobtrusive appeared differently in relation

to other microcontroller stages. The most prudent adjustment of the Arduino module can be gathered by hand, and even the pre-amassed Arduino modules cost under $50.

- Cross-organize - The Arduino programming continues running on Windows, Macintosh OSX, and Linux working structures. Most microcontroller systems are obliged to Windows.
- Simple, clear programming condition - The Arduino programming condition is definitely not hard to-use for students, yet adequately versatile for bleeding edge customers to abuse as well. For instructors, it's supportively established on the Processing programming condition, so understudies making sense of how to program in that condition will be familiar with the look and feel of Arduino.
- Open source and extensible programming - The Arduino writing computer programs are appropriated as open source instruments, available for extension by experienced engineers. The language can be reached out through C++ libraries, and people expecting to fathom the particular nuances can make the bounce from Arduino to the AVR C programming language on which it's based. Subsequently, you can incorporate AVR-C code authentically into your Arduino programs if you have to.
- Open source and extensible gear - The Arduino relies upon Atmel's ATMEGA8 and ATMEGA168 microcontrollers. The plans for the modules are dispersed under a Creative Commons license so experienced circuit originators can make their own one of a kind adjustment of the module, expanding it and improving it. In reality, even commonly fresh customers can amass the breadboard type of the module to perceive how its capacities and put aside some money.

4.2.1 Microcontroller Used in Experiments

For the programming and tests, the microcontroller used was Arduino UNO R3 which is an open-source microcontroller board subject to the Microchip ATmega328P microcontroller and made by Arduino.cc. The board is furnished with sets of cutting edge and straightforward data/yield (I/O) sticks that may be interfaced to various advancement sheets (shields) and various circuits. The board has 14 Digital pins, 6 Analog pins, and programmable with the

Arduino IDE (Integrated Development Environment) by methods for a sort B USB link. It tends to be filled by a USB interface or by an outside 9-volt battery, in any case, it recognizes voltages some place in the scope of 7 and 20 volts. It is also similar to the Arduino Nano and Leonardo.

The gear reference arrangement is scattered under a Creative Commons Attribution Share-Alike 2.5 grant and is open on the Arduino site. Structure and creation records for specific adjustments of the gear are furthermore available. "UNO" connotes one in Italian and was picked to stamp the landing of Arduino Software (IDE) 1.0 The UNO board and structure 1.0 of Arduino Software (IDE) were the reference versions of Arduino, by and by cutting edge to additional modern releases. The UNO board is the first in a movement of USB Arduino sheets and the reference model for the Arduino arrange. The ATmega328 on the Arduino UNO comes prearranged with a bootloader that empowers exchanging new code to it without the use of an outside gear designer. It passes on using the first STK500 show. The UNO in like manner shifts from each first board in that it doesn't use the FTDI USB-to-consecutive driver chip. Or maybe, it uses the Atmega16U2 (Atmega8U2 up to variation R2) modified as a USB-to-successive converter.

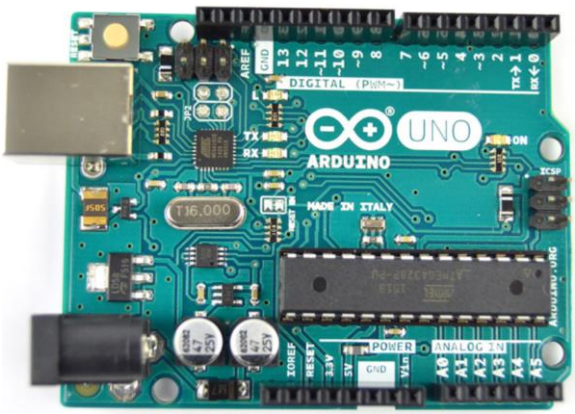

Figure 42 Arduino UNO R3

The technical specification of Arduino UNO R3 is as follows.

- Microcontroller: Microchip ATmega328P
- Operating Voltage: 5 Volts

- Input Voltage: 7 to 20 Volts
- Digital I/O Pins: 14 (of which 6 provide PWM output)
- Analog Input Pins: 6
- DC Current per I/O Pin: 20 mA
- DC Current for 3.3V Pin: 50 mA
- Flash Memory: 32 KB of which 0.5 KB used by bootloader
- SRAM: 2 KB
- EEPROM: 1 KB
- Clock Speed: 16 MHz
- Length: 68.6 mm
- Width: 53.4 mm
- Weight: 25 g

4.2.2 General Pin Functions in Arduino UNO

The functions are as follows.

- **LED**: There is a built-in LED driven by digital pin 13. When the pin is HIGH value, the LED is on, when the pin is LOW, it's off.
- **VIN**: The input voltage to the Arduino/Genuino board when it's using an external power source (as opposed to 5 volts from the USB connection or other regulated power sources). You can supply voltage through this pin, or, if supplying voltage via the power jack, access it through this pin.
- **5V**: This pin outputs a regulated 5V from the regulator on the board. The board can be supplied with power either from the DC power jack (7 - 20V), the USB connector (5V), or the VIN pin of the board (7-20V). Supplying voltage via the 5V or 3.3V pins bypasses the regulator, and can damage the board.
- **3V3**: A 3.3-volt supply generated by the onboard regulator. Maximum current draw is 50 mA.
- **GND**: Ground pins.
- **IOREF**: This pin on the Arduino/Genuino board provides the voltage reference with

which the microcontroller operates. A properly configured shield can read the IOREF pin voltage and select the appropriate power source or enable voltage translators on the outputs to work with the 5V or 3.3V.

- **Reset**: Typically used to add a reset button to shields which block the one on the board.

4.2.3 Communication

The Arduino/Genuino UNO has various offices for speaking with a PC, another Arduino/Genuino board, or different microcontrollers. The ATmega328 gives UART TTL (5V) sequential correspondence, which is accessible on computerized pins 0 (RX) and 1 (TX). An ATmega16U2 on the board channels this sequential correspondence over USB and shows up as a virtual com port to programming on the PC. The 16U2 firmware utilizes the standard USB COM drivers, and no outside driver is required. Notwithstanding, on Windows, a .inf record is required. The Arduino Software (IDE) incorporates a sequential screen which enables straightforward literary information to be sent to and from the board. The RX and TX LEDs on the board will streak when information is being transmitted by means of the USB-to-sequential chip and USB association with the PC (however not for sequential correspondence on pins 0 and 1). A Software Serial library permits sequential correspondence on any of the UNO's computerized pins.

As opposed to requiring a physical press of the reset catch before a transfer, the Arduino/Genuino UNO board is planned in a manner that enables it to be reset by programming running on an associated PC. One of the equipment stream control lines (DTR) of the ATmega8U2/16U2 is associated with the reset line of the ATmega328 by means of a 100 nano-farad capacitor. At the point when this line is attested (taken low), the reset line drops sufficiently long to reset the chip.

This setup has different ramifications. At the point when the UNO is associated with a PC running Mac OS X or Linux, it resets each time an association is made to it from programming (by means of USB). For the accompanying half-second or somewhere in the vicinity, the bootloader is running on the UNO. While it is customized to overlook deformed information

(for example anything but a transfer of new code), it will block an initial couple of bytes of information sent to the board after an association is opened.

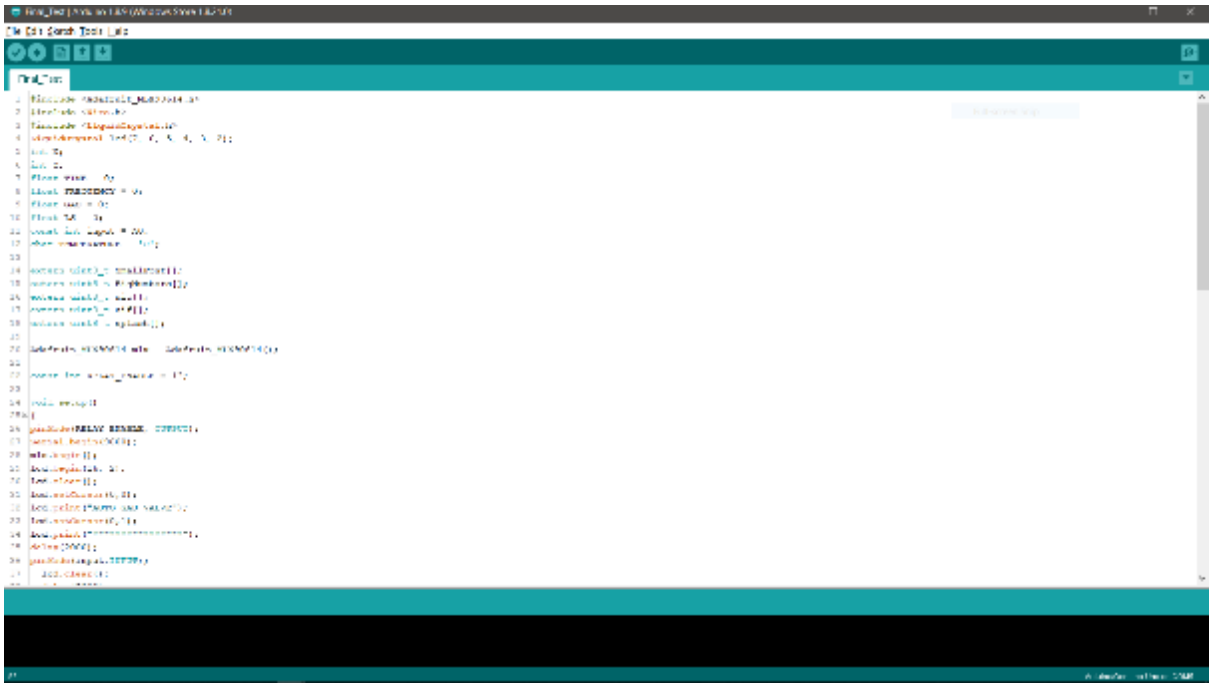

Figure 43 Coding of full circuit in Arduino IDE

5 Results

This section shows the results and their discussion that I achieved from the research project. significant ramifications of the examination discoveries, paying little mind to the factual importance of this exploration is talked about beneath. Further, Identifying the imperfection and impediment of this the venture can be helpful for future analysts so as to proceed with their examination. The significant object of "Smart Kitchen – Valve Compartment" is to give a proficient kitchen the executive's framework to society.

After the hardware and the segments have been checked and the arranging stage was finished then the venture moved onto the interfacing stage where I expected to associate and program every one of the segments together with Arduino alongside the whole framework configuration was finished.

The execution of the framework was then done well ordered following the request of significance and the coding should be finished. The Arduino board will be coded to control the electromagnetic valve automatically with the temperature of food. The association of the Arduino board to the parts would then be able to be executed.

5.1 All Components Associated Together

The vital task for the upcoming time After connecting the LCD Display, Gas Flow Sensor, IR (Infrared) Temperature Sensor and the Electromagnetic Gas Valve with Arduino as shown above in the Experiment section, finally the next stage was to connect and program all the four components together.

5.1.1 Merge Codes of all components

There are 8 stages I followed for combining four sketches in Arduino, although I might finish early depending on what is in my sketches. These steps are as follows

- Physically got the sketches into the same file.
- Resolved duplicate function names by renaming the functions.

- Wrote new setup and loop functions.
- Removed duplication of function calls.
- Resolved duplicate global variable names.
- Resolved dual use of hardware resources.
- Tidy up the code.
- Thought what I actually want the merged code to do.

The results after the experiments and the pictures taken after all the components connected together are as follows.

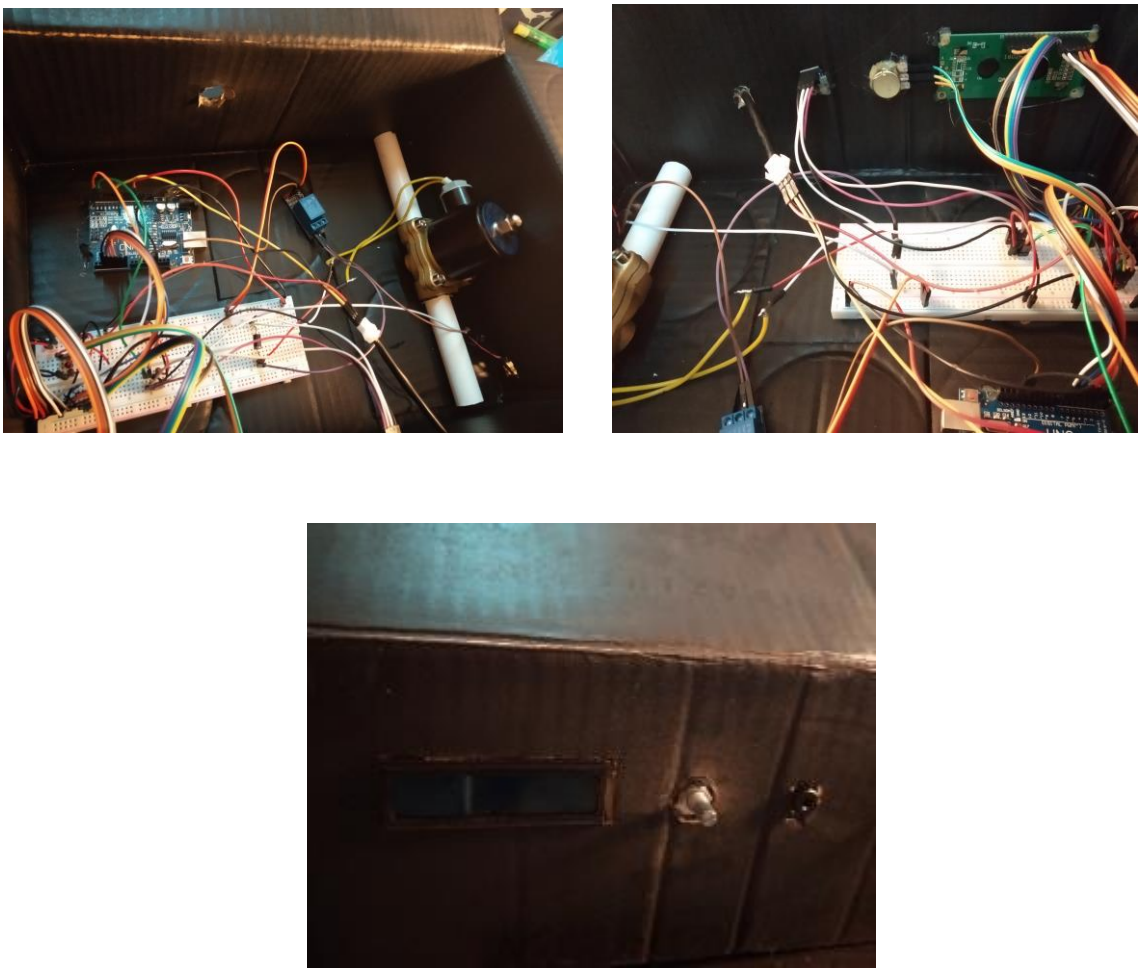

Figure 44 Final Presentation of Project

Conclusion

This paper presents the design, development, and approval of a smart, automatically controlled gas valve which can control the gas in the stove as indicated by the temperature of food in our Smart kitchen for clients. The framework idea and its usage are creative, merging different components to build the automatically controlled gas valve.

As indicated by various Experiments, the foundation of the framework is its coding dependent on an Arduino microcontroller chip (codes for independent parts) are responsible for giving the required functionalities. It additionally permits effectively deciding the gas stream in our Smart kitchen framework. Functionalities of the framework can be effectively extended by adding standards and client situations to the Logic Unit and User Interface Controller, which may utilize existing gadgets or new ones. Indeed, even the kitchen situation can be extended to the entire house by characterizing new client situations, without adjusting the framework engineering, nor the current standards. So, at last, an automatically controlled gas valve framework was made being able to control the gas flow and determine it.

The Smart kitchen will be assessed with a more noteworthy number of clients so as to check this first subjective assessment. Also, a field study will be directed to survey the capacity of Smart kitchen framework to upgrade the client's vitality mindfulness and, so as to comprehend on the off chance that it is capable or not to add to expand vitality sparing and to exhibit its advantages concerning different recommendations in the writing.

Acknowledgment

I might want to genuinely thank my Supervisor, Professor Feng Lin. Amid this previous year, educator Feng gave me cautious direction and care, while setting aside a few minutes out of a bustling calendar to enable me to plan for the different phases of the proposal. He showed me how to have a sorted-out methodology of logical research and the significance of emphasis in experimentation. A notice goes to my lab mates and companions Rouhaan Niaz, ZhouQiang and Arsalan who quietly went with me through the obstacles of driving a lone wolf level research in a nation where I could scarcely talk any specialized term. I will dependably recall the persistence of ZhouQiang and Naveed Khan and their real assistance in troublesome occasions.

Much obliged to you to my closest companion from Electrical Engineering, Hamza Sajid with whom I went through this eighteen-month learning at Beihang University and finding how immense the world his. Wherever our way may lead us, it was a joy to impart this experience to you. My involvement in Beijing, and in this way my trust in the achievement of my proposition, wouldn't have been the equivalent without the stunning effect producers I had the chance to meet through. On the off chance that my college foundation gave the way to have an effect, you gave me a reason, and I'm everlastingly thankful to have discovered guides and companions, for example, Fakher, Chairman, Frances, Michael, Daria, Litva, Catia, Raja, Abi, and those I won't list yet that have a place in this affirmation. To my companions that left China over the season of my investigations, I wish the best achievement in the entirety of your undertakings. Three floods of lone wolf understudies I have seen, but the primary individuals I met and travel with: Zeeshan, Lintong, and Lara left me my most wonderful recollections in this nation. The rundown goes on.

I devote the last lines to my family, my Mother and my Father who never neglected to help me through is warm messages, from whom I wish the best throughout everyday life, Tony and Lana and their delightful child – Constantin – that I'm anxious to invest energy with, Johanna the cutest snow princess of all.

Serina, thank you from the bottom of my heart for the invaluable support that you provided me through this half year.

References

1. W. Ju, R. Hurwitz, T. Judd, and B. Lee. Counteractive: an interactive cookbook for the kitchen counter. Conference on Human Factors in Computing Systems, pages 269–270,2001
2. J. S. Bradbury, J. S. Shell, and C. B. Knowles. Hands on cooking: towards an attentive kitchen. Conference on Human Factors in Computing Systems, pages 996–997, 2003.
3. I. Siio, R. Hamada, and N. Mima. The kitchen of the future and applications. Lecture Notes in Computer Science, 4551:946–955, 2007.
4. Centre for industrial studies, "Process of kitchen furniture purchasing in Italy", 2003 [Online]
5. ISPESL, "Accidents at home" Transl. "Case, persone, infortuni: conoscere per prevenire", 2002 [Online]
6. IEA energy efficiency, "Report" 2011 [Online].
7. Aarts, E.; Wichert, R. Ambient Intelligence. In Technology Guide; Bullinger, H., Ed.; Springer: Berlin/Heidelberg, Germany, 2009; pp. 244–249.
8. Van Den Broek, G.; Cavallo, F.; Wehrmann, C. AALIANCE Ambient Assisted Living Roadmap; IOS Press: Leiden, The Netherlands, 2010.
9. O'Grady, M.J.; Muldoon, C.; Dragone, M.; Tynan, R.; O'Hare, G.M.P. Towards evolutionary ambient assisted living systems. J. Ambient Intell. Humaniz. Comput. 2010, 1, 15–29.
10. Falcó, J.; Vaquerizo, E.; Lain, L.; Artigas, J.; Ibarz, A. AmI and deployment considerations in AAL services provision for elderly independent living: The MonAMI project. Sensors 2013, 13, 8950–8976.
11. Muñoz, A.; Serrano, E.; Villa, A.; Valdés, M.; Botía, J.A. An approach for representing sensor data to validate alerts in ambient assisted living. Sensors 2012, 12, 6282–6306.
12. Lei, J.; Ren, X.; Fox, D. Fine-Grained Kitchen Activity Recognition Using RGB-D. Proceedings of the ACM International Conference on Ubiquitous Computing, Pittsburgh, PA, USA, 5–8 September 2012.

13. Suryadevara, N.K.; Mukhopadhyay, S.C. Wireless sensor network-based home monitoring system for wellness determination of elderly. IEEE Sens. J. 2012, 12, 1965–1972.
14. Ficocelli, M.; Nejat, G. The design of an interactive assistive kitchen system. Assist. Technol. 2012, 24, 246–258.
15. Chen, J.H.; Chi, P.P.Y.; Chu, H.H.; Chen, C.C.H.; Huang, P. A smart kitchen for nutrition-aware cooking. IEEE Pervasive Comput. 2010, 9, 58–65.
16. Frey, J.; Neßelrath, R.; Stahl, C. An Open Standardized Platform for Dual Reality Applications. In Proceedings of the International Conference on Intelligent User Interfaces (IUI) Workshop on Location Awareness for Mixed and Dual Reality LAMDa11, Palo Alto, CA, USA, 13–16 February 2011. Sensors 2014, 14 1651
17. Neßelrath, R.; Haupert, J.; Frey, J.; Brandherm, B. Supporting Persons with Special Needs in Their Daily Life in a Smart Home. In Proceedings of the 2011 7th International Conference on Intelligent Environments (IE), Nottingham, UK, 25–28 July 2011; pp. 370–373.
18. Schwartze, V.; Feuerstack, S.; Albayrak, S. Behavior-Sensitive User Interfaces for Smart Environments. In Digital Human Modeling; Springer: Berlin/Heidelberg, Germany, 2009; pp. 305–314.
19. Bonanni, L.; Lee, C.; Selker, T. Counter Intelligence: Augmented Reality Kitchen. In Proceedings of the CHI 2005, Portland, OR, USA, 2–7 April 2005; p. 44.
20. Intelligent Spoon. Counter Intelligence. MIT Media Lab. Available online: http://www.media.mit.edu/ci/projects/intelligentspoon.html (accessed on 3 October 2013).
21. Chameleon Mug. Counter Intelligence. MIT Media Lab. Available online: http://www.media.mit.edu/ci/projects/chameleonmug.html (accessed on 3 October 2013).
22. D. Surie, O. Laguionie, T. Pederson, —Wireless sensor networking of everyday objects in a smart home environment‖, Proceedings of the International Conference on Intelligent Sensors, Sensor Networks and Information Processing- ISSNIP- 2008, pp.

189 – 194.

23. J. Tsado, O. Imoru, S.O. Olayemi, ―Design and construction of a GSM-based gas leak Alert system‖, IEEE Transaction, IRJEEE Vol. 1(1), pp. 002-006, September 2014.
24. M. Eisenhauer, P. Rosengren, P. Antolin, ―A Development Platform for Integrating Wireless Devices and Sensors into Ambient Intelligence Systems‖, pp.1-3.
25. Vision and Challenges for Realizing the Internet of Things, European Union 2010, ISBN 9789279150883.
26. A. Dohr, R. Modre-Opsrian, M. Drobics, D. Hayn, and G. Schreier, ―The internet of things for ambient assisted the living, ‖ in Information Technology: New Generations (ITNG), 2010 Seventh International Conference on, 2010, pp. 804 – 809
27. Apeh S.T, Erameh K.B, Iruansi U., ―Design and Development of Kitchen Gas Leakage Detection and Automatic Gas Shutoff System. ‖, Journal of Emerging Trends in Engineering and Applied Sciences (JETEAS) 5(3):222-228 (ISSN: 2141-7016) Scholar link Research Institute Journals, 2014
28. Giannakouris, K. Ageing Characterises the Demographic Perspectives of European Societies. Eurostat, Statistics in focus 72/2008. Available online: http://epp.eurostat.ec.europa.eu/cache/ITY_OFFPUB/KS-SF-08-072/EN/KS-SF-08-072-EN.PDF (accessed on 3 October 2013).
29. Resident Population Projections by Sex and Age: 2010 to 2050. Available online: http://www.census.gov/ (accessed on 3 October 2013).
30. NIPSSR. Population Projections for Japan: 2001–2050. With Long-Range Population Projections: 2051–2100; NIPSSR: Tokyo, Japan, 2002.
31. Angermann, A.; Bauer, R.; Nossek, G.; Zimmermann, N. Injuries in the European Union. Statistics Summary 2003–2005; Austrian Road Safety Board: Vienna, Austria, 2007.
32. Mohamed A., Ahmed F., Smart home automated control system using android application and microcontroller. International Journal of Scientific & Engineering Research, (2014) vol. 5(5), pp: 935-939.
33. Sheikh F., Xinrong L., Wireless Sensor Network System Design Using Raspberry Pi and Arduino for Environmental Monitoring Applications, Procedia Computer Science,

(2014), vol. 34, pp. 103-110.

34. J.-Y. Son, et al, Resource-Aware smart home management system by constructing resource relation graph, IEEE Trans. On Consumer Electronics, (2011), vol. 57, pp. 1112-1119.
35. Minh V.T, Development of a Wireless Sensor Network Combining MATLAB and Embedded Microcontrollers, Sensor Letters (2015), vol. 13(12), pp.1091-1096.
36. Reto Meier, Professional Android 4 Application Development. ebook, John Wiley & Sons, Inc. (2012) ISBN: 978-1-118-10227-5.
37. Minh, V.T, Stability for switched dynamic hybrid systems, Mathematical and Computer Modelling, (2013), vol. 57(1-2), pp. 78-83.
38. Shweta S., Priyanka R., Madhura M., Automated food ordering system with real-time customer feedback. International Journal of Advanced Research in Computer Science and Software Engineering, (2013), vol. 3(2), pp. 220-225.
39. Minh V.T, Fault detection, and control of process systems, Mathematical Problems in Engineering, (2007), vol. 2007, Article ID 80321, 20 pages.
40. R. Nunes and J. Delgado, "An Internet application for home automation", Electrotechnical Conference, 2000. MELECON 2000. The 10th Mediterranean, 2002.
41. S. Chattoraj, "Smart Home Automation based on different sensors and Arduino as the master controller", International Journal of Scientific and Research Publications, vol. 5, no. 10, 2015.
42. S. B.M, R. C, M. S.R, P. R, P. K. Mane and K. S, "LPG Detection, Measurement, and Booking System", IJRSI, vol., no., pp. 7-10, 2014.
43. A. Talgeri, A. Kumar B A and A. B, "Domotics – A Cost Effective Smart Home Automation System Using Wifi as Network Infrastructure", Int. Journal of Engineering Research and Applications, vol. 4, no. 8, pp.
44. R. Kamoda, M. Ueda, T. Funatomi, M. Iiyama, and M. Minoh, "Grocery Re-identification using Load Balance Feature on the Shelf for Monitoring Grocery Inventory."
45. F. M.L.K.E., F. W.D.P., A. G.R.S.T., J. N, and G. I., "Smart Kitchen Mate A Home Budget

Management System for Food Items."

Appendix

Code used in the final project is given below.

```
#include <Adafruit_MLX90614.h>
#include <Wire.h>
#include <LiquidCrystal.h>
LiquidCrystal lcd(7, 6, 5, 4, 3, 2);
int X;
int Y;
float TIME = 0;
float FREQUENCY = 0;
float GAS = 0;
float LS = 0;
const int input = A0;
char TEMPERATURE = 'C';

extern uint8_t SmallFont[];
extern uint8_t BigNumbers[];
extern uint8_t uic[];
extern uint8_t uif[];
extern uint8_t splash[];

Adafruit_MLX90614 mlx = Adafruit_MLX90614();

const int RELAY_ENABLE = 13;

void setup()
{
pinMode(RELAY_ENABLE, OUTPUT);
Serial.begin(9600);
mlx.begin();
lcd.begin(16, 2);
lcd.clear();
lcd.setCursor(0,0);
lcd.print("AUTO GAS VALVE");
lcd.setCursor(0,1);
lcd.print("****************");
delay(2000);
pinMode(input,INPUT);
   lcd.clear();
   delay(3000);
```

```
}
void loop()
{
X = pulseIn(input, HIGH);
Y = pulseIn(input, LOW);
TIME = X + Y;
FREQUENCY = 1000000/TIME;
GAS = FREQUENCY/7.5;
LS = GAS/60;
if(FREQUENCY >= 0)
{
if(isinf(FREQUENCY))
{
lcd.clear();
lcd.setCursor(0,0);
lcd.print("VOL: 0.00");
lcd.setCursor(0,1);
lcd.print("TEMP: ");
lcd.print( mlx.readObjectTempC());
lcd.print(" *C");
}
else
{
Serial.println(FREQUENCY);
lcd.clear();
lcd.setCursor(0,0);
lcd.print("VOL: ");
lcd.print(GAS);
lcd.print(" m/s");
lcd.setCursor(0,1);
lcd.print("TEMP:");
lcd.print( mlx.readObjectTempC());
lcd.print(" *C");
}
delay(1000);
}
if ((mlx.readObjectTempC() >50) && (mlx.readObjectTempC() <70))
  {
  Serial.println("Relay ON");
  digitalWrite(RELAY_ENABLE, LOW);
  delay(3000);
  Serial.println("Relay OFF");
  digitalWrite(RELAY_ENABLE, HIGH);
  delay(3000);
```

```
  }
else if ((mlx.readObjectTempC()>70))
  {
  Serial.println("Relay OFF");
  digitalWrite(RELAY_ENABLE, HIGH);
  }
else if ((mlx.readObjectTempC)() <30)
  {
  Serial.println("Relay ON");
  digitalWrite(RELAY_ENABLE, LOW);
  }
}
```