Real Time Environment Monitoring System using IOT

Sonu Kumar*, Rajnish Kumar, Ujjawal Maan, Ridhima Grover
Faculty of ECE Department, IIMT College of Engineering, Greater Noida, India
****Corresponding Author***
E-Mail Id: sonukumariimt22@gmail.com

ABSTRACT

To monitor the humidity, ambient light status and temperature.Here in paper implement the design of an operative prototype based on IOTconcepts for real time monitoring of different environmental conditions using particular familiar available and low-cost sensors. The distinctive natural conditions like temperature, air contamination, sunlight intensity and rain are consistently checked, process and constrained by an Arduino board with the assistance of individual sensors this data is circulated through internet with an ESP8266 Wi-Fi module. It shows reliability and the system work well. This prototype isuse to monitor real time data used by graphical information of environment.

Keywords: *IOT, Wi-Fi, sensor network*

INTRODUCTION

A Real time Environmental monitoring system is based on sensor network. The system consists of different types of sensor nodes and monitor sensor nodes collect temperature and humidity and ambient light status information and send the data in server for wellness and sustainability of all the living beings. The variables of physical condition, similar to temperature, humidity, air quality, light and rain have critical impact ems and exchange of data between them. Earth's environment determines on people's health, living habits and surroundings. These are also linked with the different facets of environment. Ecological wellbeing and the sufficiency of a human territory for safe living is vital from numerous viewpoints

Its monitoring is critical. Only about 3% of world's geography is the cities are occupied by 50% of world's populations and this amount of populations generate about 80% of carbon dioxide emission [1]. Apart from this, the said factors have significance influence on the agriculture field and related domains [2,3]. Over the years, the proliferation of wireless devices have given rise to internet of things (IoT) which enables connection of system The recent developments and the popularity of IoT are linked to the possibility of it application for real time monitoring . This viewpoint is the premise of the structure of the proposed system dependent on IoT for monitoring of certain ecological boundaries, for example, temperature, humidity, air contamination, sun light intensity and rain which is seen as solid and proficient. Traditional strategies to consider boundaries, for example, temperature, humidity, air contamination, sun light intensity and rain take longer time, greater expense and frequently end up being temperamental. Further, such checking may consistently not be done in a unified platform.

With the penetration of mobile communication network to the remote areas, IoT based real time monitoring of environmental parameters such as temperature, humidity, air pollution, sun lightintensity and rain has turned out to be an efficient and cost effective solution. If the above mentioned natural parameters are appropriately monitored utilizing a

coordinated system, it will have numerous applications like agriculture for observing the healthy growth of crops, in industries to ensure the safe working environment in industries as well as healthy life in cities. IoT has been broadly developing for the production of smart environment, smart cyber world and smart application [4]. Various IoT based application has been reported such as pollution monitoring, waste management, water quality, this work emphasizes on simplicity, low cost and data control.

DESCRIPTION

The recommended prototype is summarized using a block diagram.The system consists of sensor networks, control and processing unit and a web server which can store data and provide necessary tools for analysis.

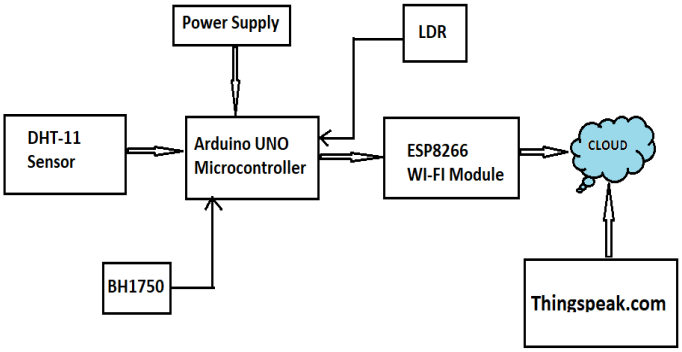

The base of the system is built up using an Arduino UNO board which provide control and processing with the help of ATmega 2560 microcontroller. The sensor systems comprise of different sensors to detect key natural boundaries, for example, temperature, humidity, air contamination, sun light intensity and rain The Arduino straightforwardly speak with the individual sensor and gathers vital data. Once data are available, it performs a series of processes and transfers the data to the server via a Wi-Fi module (ESP8266). The sensors that are designed and are utilized for observing real time data of the environment are DHT11 (Temperature and Humidity Sensor), KG004 (rain drop light dependent)

On the server side, we have chosen platform which provides support for various graphical analysis tools. These devices upgrade the analysis and visualization capacities and give a superior graphical user interface.

SYSTEM DESIGN AND IMPLEMENTATION

The essential focus of this work is to structure an IoT based monitoring system which monitors ecological boundaries, for example, temperature, humidity, air contamination, sunlight intensity and rain.

The design works in real time and captures the data for analysis. The depiction covers the making of sensor systems, electronic gadget, the useful software requirements, programming and improvement process, the execution and testing just as the finished result of the prototype. The details of the different constituent blocks are included in the subsequent paragraphs.

Sensor Network Design

The best way to get the genuine feeling of the different natural boundaries is using the sensors. The plan of the sensor network is crucial piece of the system as the end client would depend on data gave by these sensors as it were. Effectively designed

and precisely calibrated sensor system will fill the need. The sensors used to gauge different ecological boundaries have been recorded in the Table1. The DHT11 Sensor furnishes a temperature and humidity readouts with a calibrated digital signal reading. It utilizes the advanced sign obtaining strategy for temperature

Sensor Name/Models	Measurement Parameters
DHT-22	Temperature and Humidity
BH-1750	Ambient Light
LDR	Light Intensity
Cloud ThingSpeak	Data Storage
ESP8266	Wi-Fi-Module

Programming Environment & Development Process

The microcontroller in the Arduino board is programmed with the Arduino IDE for connecting to the sensor network, reading their data and finally for sending these data over Wi-Fi network after pre-processing. For storing the data on the server side ThingSpeak platform has been used. Thing to complete steps that has been followed for successful transmission of sensor. System broadcast sensors' data remotely with the assistance of an ESP8266 Wi-Fi module dependent on the Arduino board through web association with ThingSpeak for additional examination. The ThingSpeak stage has been coordinated and performed based data analysis. ThingSpeak has got its own tool compartment. The ThingSpeak open channel has been utilized to analyze and picture gathered data with the implicit "Analysis" and "Visualizations". System broadcast sensors' dat remotely with the assistance of an ESP8266 Wi-Fi module dependent on the Arduino board through web association with ThingSpeak for additional Analysis. The services or Data in the servers are given through the Internet that are associated through LAN and made accessible for clients by means of advanced mobile phones, internet browser or other internet browser gadgets to make the system progressively keen, versatile and effective.

The ThingSpeak platform has been integrated with and can be performed based data analysis. ThingSpeak has got its own toolbox in. The ThingSpeak public channel has been used to analysis and visualize collected while the experiments are performed. At present, the gas sensor has been calibrated mainly. The list of the data appeared as the data has been recorded at the interval of 15 second. Now this data is storing in cloud and it used for the inquiry of the continuous monitoring purpose.

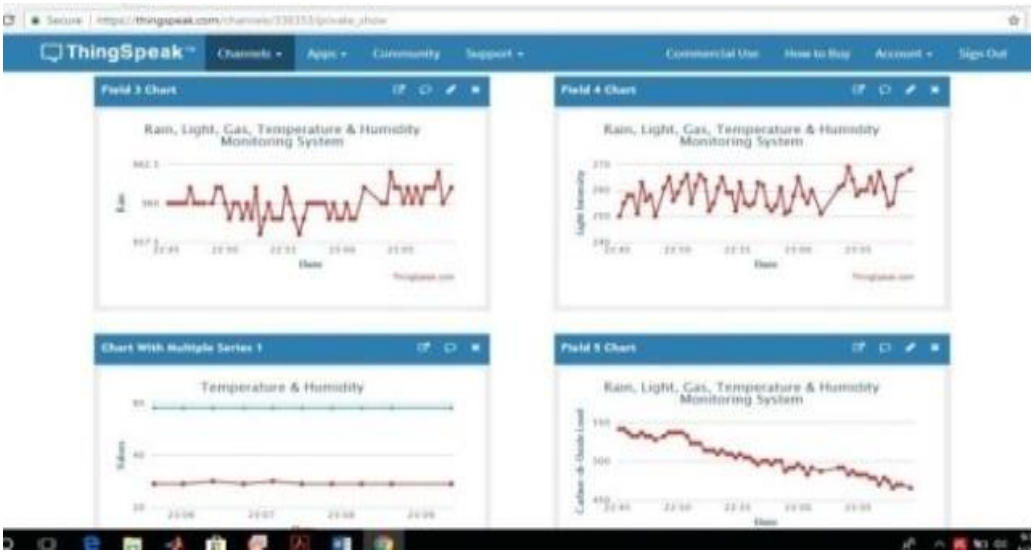

EXPERIMENTAL RESULTS

Certain experiments are performed and results derived. The results derived are presented here and the performance of the system is also analysis. The associations are made as clarified above and the arrangement is exposed to the ecological boundaries under test to decide the degrees of temperature, humidity, rain, light intensity and contamination gases

The captured data are all passed to the server using wi-fi links which has already been explained. The device runs a measurement as and with an aim to check the reliability of the design, the IoT based monitoring sends the data to the server. Shows the embedded system with the sensors associated for perusing natural boundaries and the ESP8266 Wi-Fi module to send boundary esteems and store in the capacity cloud which is accessible for sharing.

After completing the analysis on data, the threshold values have been set for controlled purpose. Desktop view of the sensors data accessed through a browser. The parameters that are seen in the browser are the state of the humidity, temperature, amount of rain, light intensity and level value at the time.

CONCLUSIONS

In this paper, we have introduced the structure, implementation and testing of a minimal cost IoT based condition monitoring system. The portrayal covers the subtleties of monitoring of different boundaries of the earth utilizing an IoT based system and remotely accessing to the information through the web.

Acknowledgment

I thank the Department of Electronics and Communication Engineering for permitting to use the experimental and computational facilities available in center for internet of Thing which is set with the support the student.

REFERENCES

1. Black, B., & Weisel, G. J. (2010). *Global warming*. Greenwood.
2. Dan, L. I. U., Xin, C., Chongwei, H., & Liangliang, J. (2015, December). Intelligent agriculture greenhouse environment monitoring system based on IOT technology. In *2015 International Conference on Intelligent Transportation, Big Data and Smart City* (pp. 487-490). IEEE.
3. Kiani, A., Salman, A., & Riaz, Z. (2014). Real-time environmental monitoring, visualization, and notification system for construction H&S management. *Journal of Information Technology in Construction*, 19, 72-91.
4. Pattar, S., Buyya, R., Venugopal, K. R., Iyengar, S. S., & Patnaik, L. M. (2018). Searching for the IoT resources: fundamentals, requirements, comprehensive review, and future directions. *IEEE Communications Surveys & Tutorials*, 20(3), 2101-2132.
5. Singh, A., Aggarwal, P., & Arora, R. (2016, September). IoT based waste collection system using infrared sensors. In *2016 5th International Conference on Reliability, Infocom Technologies and Optimization (Trends and Future Directions)(ICRITO)* (pp. 505-509). IEEE.
6. Alahmad, M., Nader, W., Brumbaugh, A., Cho, Y., Ci, S., Sharif, H. & Neal, J. (2011, February). The “BIM's 4D+” dimension: Real time energy monitoring. In *2011 IEEE GCC conference and exhibition (GCC)* (pp. 589-592). IEEE.
7. Al-Jabi, M., & Diab, M. (2017, December). IoT-enabled citizen attractive waste management system. In *2017 2nd International Conference on the Applications of Information*

Technology in Developing Renewable Energy Processes & Systems (IT-DREPS) (pp. 1-5). IEEE.

8. G. Werner-Allen et al., ‘‘Deploying a Wireless Sen-sor Network on an Active Volcano,’’ IEEE InternetComputing, March/April 2006, pp. 18-25.5. F.L. Lewis, ‘‘Wireless Sensor Networks,’’ SmartEnvironments, Technologies Protocols, and Applications, D.J. Cooke and S.K. Das, eds., John Wiley,2004.6.
9. Seung Ho Kim; Jong Mun Jeong; Min Tae Hwang; Chang Soon Kang, Development of an IoT-based atmospheric environment monitoring system, International Conference on Information and Communication Technology Convergence (ICTC), (2017).
10. Azhar, S., Khalfan, M., Maqsood, T. (2012). Building information modeling (BIM): now and beyond, Australasian Journal of Construction Economics and Building, Vol. 124, 15-28.
11. Ishfaq Ali; Muhammad Asif, applying security patterns for authorization of users in IoT based applications, International Conference on Engineering and Emerging Technologies (ICEET), (2018).
12. G. Sberveglier, Gas Sensors. Springer, 1998. 13. Daniel Vallero, Fundamentals of Air Pollution. Academic Press, 2014.