ON THE ST. GOTHARD TUNNEL.

BY HERR E. WENDELSTEIN, OF LUCERNE.

The present paper is intended to give a brief sketch of the methods employed in constructing and working the great Tunnel piercing the chain of the Alps on the line of the St. Gothard Railway. A plan of the district passed through by the tunnel is given in Fig. 1, Plate 6; and a section of the tunnel, with the overlying rocks, is given in Fig. 2, Plate 7. Of the approaches to the tunnel on either side, which possess many points of great interest, no account will be attempted in the present paper; but it is hoped that this may be given in a future communication, which will also deal with the important questions of ventilation and temperature. The present paper will be concerned with matters of construction only.

The subject may be conveniently divided as follows:—

1. General Design.
2. Motive Power.
3. Air-Compressors.
4. Boring Machines.
5. Removal of Spoil.
6. Cost.

1. GENERAL DESIGN.

The tunnel forms a straight line in plan, Fig. 1, Plate 6, having a total length of 14,900 metres (about 9¼ miles) between the northern portal at Göschenen and the southern portal at Airolo. The former is at a height of 1,109 metres above the sea (about 3,640 feet), and the latter of 1,145 metres (about 3,760 feet). From the northern portal the line rises with a gradient of 0·5 per cent. (1 in 200), to a point 7,801 metres within the tunnel (about 4·9 miles), and then falls towards the southern portal with a gradient beginning at 0·05 per

cent., then changing to 0·2 per cent., and ending at 0·1 per cent. The trigonometrical and other methods by which the centre line of the tunnel was originally fixed, and adhered to during construction, will not here be entered upon.

It will be seen by Fig. 1 that the actual carriage pass of the St. Gothard lies considerably to the west of the tunnel, and at a much greater elevation, namely 2,114 metres (about 6,940 feet) above the sea. It was at first proposed to carry the railway over the plain of Andermatt, and for some distance further up the valley, and to pierce the main chain with a comparatively short tunnel not far from the pass. This tunnel could have been executed by means of shafts from above; but it was found that the plan would not have resulted in any true economy. The proposal belongs in fact to the period when there were still many who doubted the practicability of constructing tunnels of such a length as 9 miles. Even in 1859 M. Flachat, in his work "De la Traversée des Alpes," advised the giving up of the work already begun at Mont Cenis, and the substitution of a shorter tunnel at a higher level. He even maintained that all the Swiss passes might be crossed by summit railways, at a height of say 2000 to 2100 metres above the sea (6500 to 7000 ft.). But the conditions of climate forbid any such attempt. The snow lies for 3 to 4 months of the year at a height of 2300 feet, for 5 to 6 months at a height of 3300 ft., and for 8 or 9 months at a height of 6000 to 7000 ft. At the level of 2300 ft. it attains every winter a depth of over 3 ft.; at 3500 ft. a depth of 6 ft.; at 4500 ft. (*e.g.* at Bardonnecchia on the Mont Cenis line) an average depth of 11 ft.; and at 5000 ft. a depth of about 13 ft. In addition, the well-known effect of snow drifts has to be considered. At heights of 5000 to 6000 feet a storm will often drift the snow to a depth of 50 ft. or more. Such masses cannot be attacked by the snow plough, and can only be removed by hand labour; which obviously could not be obtained to an extent sufficient to keep clear an ordinary railway, especially as such drifts may occur at any point, and snow storms in such regions sometimes last for a week together.

The covering in of the railways by galleries, as practised on the Pacific line across the Rocky Mountains, would not solve the

difficulty; both on account of the much greater cost of construction in that case, and from the fact that the lifting of the trains to a higher level would largely and permanently increase the cost of haulage. In the case of the St. Gothard line, the only practical question was whether it should be continued over the plain of Andermatt to Hospenthal, at a height of about 4,800 ft. above the level of the sea. The tunnel would then have had a length of about 6½ miles, say 3 miles less than its length as made. But this shortening of the tunnel would not have outweighed the disadvantages due to its higher level, as indicated above. An intermediate position between Göschenen and Hospenthal would not have shortened the tunnel by any material amount. It cannot be doubted therefore that the line actually chosen was the best for the St. Gothard Railway, especially looking to its great importance with regard to the traffic of Central Europe. For lines of less consequence, and in more southern latitudes, a higher level might of course be advantageous.

The construction of the long tunnel having thus been decided on, and the actual trace laid out, a contract was entered into with Messrs. Favre and Co., of Geneva, for the completion of the work. In this contract it was provided that the tunnel should be completed within eight years. This time is much shorter than that occupied in the case of the Mont Cenis Tunnel; but that was blasted by gunpowder instead of dynamite, and the boring machines had also been much improved in the interval. As a matter of fact, the time occupied was about 9¼ years of continuous labour day and night, the work having been commenced in the summer of 1872, and completed towards the end of 1881.

It would have been possible to sink one shaft near Andermatt, at a distance of about 3½ kilometres (2·2 miles) from the northern portal. This shaft would have been about 300 metres deep (say 1000 feet). It is obvious that little would have been gained by this step, and the contractor never entertained the proposal.

The actual method of driving the tunnel is shown by the section Fig. 3, Plate 8, and is known as the Belgian method. A heading A (in German, *First-stollen*) was first driven at the top of the tunnel, 2·5 metres broad and 2·5 metres high (8·20 ft. square). Side widenings

B B were then made on either side of this heading, so as to complete the whole arch of the tunnel (*Calotte*), which was then lined with brickwork. A bottom cut (*Sohlenschlitz*) was then made in the floor, extending to the bottom of the tunnel, but lying almost wholly on one side of the centre line. This was made in two cuts C and D, and when it was completed, an abutment (*Strosse*) was still left on each side, one of them much wider than the other. The narrower one E was then cleared out and the side wall put in, and finally the wider E_1 was also cleared away and the side wall put in, as shown by dotted lines; and a single line of rails was laid, the laying of the second line being reserved for some later period when a double line should be made necessary by the increase of the traffic. This however was so large, from the period of opening, that the second line is already being laid. A drain F is cut at the corner.

The rocks passed through in the tunnel have been described as follows by the official geologist, Dr. Stapff, taking them in order from the north end.

1. The "Finsteraarhorn Massiv," A B, Fig. 2, Plate 7, which is granitic gneiss, very hard and compact, and extends for about one-seventh of the distance.

2. The "Ursern Mulde," B C, which is gneiss, rich in mica, with intervening quartzose and greenish layers. There was some amount of water in this rock.

3. The "Gothard Massiv" of pure gneiss, C D, the beds intersecting the axis of the tunnel at a high angle, and occupying about one half the total length.

4. The "Tessin Mulde," D E, which is mica schist, occupying one-fifth of the length at the southern end. This rock varied much, and yielded a good deal of water.

The whole of the rock lay in beds nearly at right angles to the axis of the tunnel, and was favourable both for boring and blasting; except the granite, No. 1 above, and a length of about 400 yards of serpentine, situated about 5,300 yards from the north entrance: these proved very hard.

There was also, about 2,800 yards from the north entrance, a length of about 85 yards at F, Fig. 2, where the gneiss changed into

a species of china-clay. This became known, during the making of the tunnel, as the "pressure-length" (*Druck-partie*), and gave great trouble by collapsing. Unfortunately the critical nature of this clay was not at first recognised. It was worked by the Belgian method described above, driving the heading along the top; but in this compressible material it would have been better to adopt the German system, running the first heading along the bottom, and making good the walling on each side as the work proceeded. Instead of this, the arch at the top was first put in, and this, having no proper abutment or cross-tie, gradually spread at the springings and let down the crown. The first repairs attempted were not sufficiently systematic, and the length continued to move and collapse. It was finally made secure by walling of great thickness, and capable of resisting the extraordinary pressure.

2. Motive Power.

The motive power at both ends of the tunnel was furnished by the streams in the neighbourhood, but the conditions were by no means the same at the two ends. At Airolo the only available source at first was the Tremola torrent, from which the supply in the depth of winter sometimes fell to 200 cubic metres (7000 cub. ft.) per second. To obtain sufficient power it was necessary to lead the water from a vertical height of 181 metres (594 ft.). Such a head, applied to powers above 200 H.P., is very rare, and occasions great practical difficulties. Besides the tendency to leakage in the pipes under such a pressure, the high speed of the issuing water, and consequently of the revolving turbines, forms a serious evil; since any want of adjustment or inferior workmanship causes great unsteadiness and consequent wear and tear. The water at such speeds has an extraordinary effect on both cast and wrought iron, and even on steel, riddling them with a number of small holes, and rendering renewal necessary in a few months. This effect is supposed to be due to oxidation, stimulated by impact and by the air contained in the water. Subsequently, in 1874, a long channel

was constructed from the Bedretta Thal, so as to open a second source of supply.

At Göschenen the supply was taken from the Reuss with a head of 93 metres (305 ft.), and the minimum supply was from 1200 to 2000 cubic metres (42,000 to 70,000 cubic ft.) per second. The power thus obtained, amounting on the whole to 1500 H.P. at Göschenen and 1120 H.P. at Airolo, was made to actuate turbines driving high-speed air-compressors.

At Airolo the turbines, originally three in number, were supplied by Escher Wyss and Co., of Zurich, and are of the type called "tangent wheels" with vertical shafts. The diameter is 1·20 metre (3·94 ft.), thickness of metal 27·7 millimetres (1·09 in.), and speed 390 rev. per min., giving a tangential velocity at the outside of 24·5 metres (80·38 ft.) per second. The water is passed through a distributor with guide-blades, having five orifices, any of which can be closed by a curved slide-valve. The distributor and guide-blades are of bronze, which in these cases lasts five or six times as long as iron or steel. Behind the distributor is a stop-valve, composed of a principal valve having a second and smaller one in the centre of it. This smaller valve is opened first and closed last, and thus diminishes the shock occasioned by starting and stopping the water under so high a pressure. The pivot of the turbine rests on four discs of hard bronze and two of hardened steel, all polished. The surfaces in contact are one concave and the other convex.

At Göschenen the turbines were on the Girard system, constructed by B. Roy and Co., of Vevey. These have horizontal axes, and receive the water on a portion only of their circumference. The water passes through a distributor with eight orifices, regulated by a circular valve placed inside the revolving crown. The speed is 160 rev. per min., the outside diameter 2·4 metres (7·87 ft.), and the number of vanes 80. There were originally three of these turbines, each using 800 litres per second (28 cub. ft.), and each giving a net power of 250 H.P. In 1876 two similar turbines were added, each 5·05 metres outside diameter (16·56 ft.), and each using 480 litres (17 cub. ft.) per second, with a head of 73 metres (239 ft.), and giving a net

power at the shaft of 325 H.P., at 70 rev. per min. A similar pair were fixed at the same time at Airolo.

3. Air-Compressors.

At Airolo three sets of air-compressors, three in a set, were erected in 1873, by the "Compagnie de Construction" of Geneva. These were of the Colladon type, and were made with interchangeable parts, in order to reduce the time of repair to a minimum.

The three sets of compressors and the three turbines were mounted in succession along the shop, Figs. 4 to 6, Plates 8 to 10, the compressors C lying horizontally, whilst the turbines T are vertical. Above each turbine is a horizontal shaft I, carrying a bevel wheel H, which gears into a bevel pinion on the vertical turbine-shaft, Fig. 5. At each end of this shaft I, and in line with it, is another horizontal shaft L, having three cranks at 120°, to which are attached connecting-rods from the three compressing cylinders C. These shafts L can be connected with the first shaft I by clutch-gear V, Fig. 4, so that one or both sets of compressors can be worked as desired.

The compressors, Fig. 6, Plate 10, are double-acting, and placed parallel to each other. The piston-rods N pass through both ends of the cylinders, and are worked by connecting-rods M from the three cranks. The diameter of the cylinders is 0·46 m. (18·11 in.), and the stroke of the piston 0·45 m. (17·72 in.), which at 390 revolutions per min. of the turbine gives a mean piston-speed of 1·35 m. per second (266 ft. per min.). The position of the cranks gives a uniform motion without the employment of a governor.

To cool the air during compression, two methods are adopted. In the first place the cylinder is provided with a jacket, in which there is a continual circulation of cold water. The piston-rod N is also made hollow, and carries within it a copper water-tube O, 0·04 metre diam. (1·57 in.). This tube, which is open at each end, has, near the middle, a collar Z outside it, of diameter equal to the bore of the rod, which it therefore closes. On each side of this collar the rod is pierced with three holes communicating with the interior of the piston, thus putting in communication the annular spaces within

the piston-rod N, on either side of the collar Z. A small fixed tube Q passes through a stuffing-box into the water-tube O. The cold water enters through the tube Q, returns from the other end outside the tube O, passes through the interior of the piston to get from one side to the other of the collar Z, and returns to the pipe Y, whence it is conducted away through a flexible hose. By this means the surfaces in contact with the compressed air, both inside and out, are kept always cool, whatever the speed; and if the air be dry, no other cooling arrangement is necessary.

Secondly, there are two spray injectors fixed at each end of the cylinder. The water for these is filtered first through a sand filter M, Fig. 4, Plate 9, and then through a wire sieve into a reservoir N. The object of this filtration is to get rid of the fine granite silt found in Alpine water, and so to prevent the wear of the packings, &c. The filtered water arrives at the compressors through the pipes P, passes through the air-vessels E, is compressed by a pump attached to the cross-head of the compressor, and is forced as fine spray into the cylinder. The volume of injected water is less than $\frac{1}{1000}$ part of the air used in the same period. It passes with the compressed air through the exhaust S, Fig. 6, and through the pipes R, to the large reservoirs shown in Fig. 4, Plate 9, where the water is deposited.

The compressors at Göschenen are similar in arrangement to those at Airolo, and have the same method of cooling the piston and cylinder. They were made by Messrs. B. Roy and Co., of Vevey. The turbines make 160 revs., and the driving-shaft 80 revs. per min.: the diameter of the cylinder is 0·42 metre (16·5 in.), and the stroke 0·65 (25·6 in.). Each set of three compressors will deliver 4 cb. m. (141 cub. ft.) per min., compressed to 8 atms. total. The piston packing is formed of two bronze rings, with a space between them, which is filled with water through a hole from the inside of the piston. This water forms a liquid packing, and at the same time cools the walls of the cylinder during the stroke. Some of it also escapes past the rings, and entering the cylinder takes the place of the spray in cooling the compressed air; for this purpose it is raised to a higher pressure when necessary by a special pump.

At each end of the tunnel two groups of compressors were

added in February 1875 to the three sets of compressors first laid down and described above; the power of the latter falling short of the requirements of the work. Finally, in the summer of 1876, still larger power being required, two further pairs of large compressors of improved construction were laid down in a fresh building.

4. Boring Machines.

Several different types of rock drill were employed more or less at the St. Gothard Tunnel. Amongst these may be mentioned the Ferroux, the Mackean and Seguin, the Dubois and François, the Turrettini, the Burleigh, &c. The Ferroux drill was the first to be employed, having been invented in 1873 specially to work in this tunnel. In 1875 the original was superseded by a simpler form devised by the inventor, and this improved drill did the greater part of the work from henceforward. As space will not allow of a description of all the varieties used, attention will be confined to this drill as the most successful example.

The improved Ferroux drill is shown in Figs. 7 and 8, Plate 11, with details enlarged in Figs. 9 to 12. It is about half the weight of the older form, and less expensive. L, Fig. 7, is the main feeding cylinder, in which works the piston M, fixed to a hollow piston-rod N. The outer end of this rod is connected to the larger or working cylinder T. In the latter, enlarged in Fig. 10, works the striking piston O, which is prolonged into the piston-rod Q, carrying at its further end the chisel or bit. The piston O is conical at each end. At either end of the cylinder T are sockets at right angles to it, and in these work the small plug-valves *aa*, which operate the entrance and exhaust of the air. These plugs are raised and lowered by the piston O, which as it reciprocates brings its conical ends under each of the plugs alternately, and so lifts it. The plug which is raised acts through the lever B to depress the other, and thus opens the other end of the cylinder to the outer air, whilst itself opening a passage from the compressed air in the chamber P to its own end of the cylinder. The piston is thus driven back to the other end, where the same operation recurs, and thus the reciprocation is carried on. The compressed air enters the feeding cylinder L, Fig. 9, from the

supply-pipe through the stop-cock I, and passes to the air-chest P, Fig. 10, through the interior of the hollow piston-rod N. At the same time, by pressing against the end of the piston M, Fig. 9, the air forces the rod N, with the working cylinder T attached to it, forwards towards the rock to be drilled. Along the top of the bearers A, Fig. 10, which carry the machine, is a rack R. When the hole has been deepened by a distance equal to the interval of the teeth of this rack, the conical shoulder C of the rod Q has advanced so far as to raise the fork D, which has two pawls engaging in the teeth of the rack. When these are raised clear of the rack, the striking cylinder T advances by the length of one tooth; and this goes on until the cylinder has advanced the whole length of the rack. A plug Z, having the compressed air below it, operates to keep the fork D down upon the rack, and to bring it down again the moment it is released by the piston-rod.

To prevent the striking cylinder from moving backwards in the opposite direction, a small cylinder X, Fig. 10, is provided at its rear end, and is open to the compressed air. In this cylinder is a plug, which presses upwards against a stirrup, carrying at its lower part the cross-piece H, Fig. 11. This cross-piece engages with two racks on the under side of the bearers A, and having their teeth in the opposite direction to that of the racks on the upper side. Whilst this piece H is engaged with the rack, no backward motion is possible; but it can be released at any time, to bring back the drill, by pushing down the stirrup.

The rotation of the rod Q, which carries the drill, is given by an inclined groove in the enlarged part of the rod. Into this groove, shown in section in Fig. 12, fits a projection *c* from the ratchet-wheel *d*. As the striking rod Q advances towards the rock, the groove in it compels the wheel *d* to turn in the direction of the teeth. When the rod comes back for another stroke, the wheel is prevented from returning by the pawl F, and therefore the piston-rod itself is compelled to turn.

To bring the machine back when the hole is finished, the cock I is closed and the cock J is opened, Fig. 9. The air then escapes from behind the piston M through the chamber P into the atmosphere, while it enters through the pipe K into the annular space on the

front side of the piston M, and pushes it, with the striking cylinder and piston, back to the rear end of the cylinder L.

The weight of the machine is about 180 kilograms, or 397 lbs., and the gross quantity of compressed air used per stroke is 1·40 litres (85 cub. in.). The advantages claimed for it are diminished weight and cost, reduction in the number of parts, ease of maintenance, and durability.

The drill is connected with the carriage by means of a pin passing through the plate Y, Figs. 7 and 8. This carriage, which weighs about 2,400 kilograms (2·4 tons), is shown in Figs. 13 to 15, Plates 12 to 14. It is so arranged that, in a heading only 2·60 metres wide (8½ ft.), the débris can be removed without shifting the carriage, as there is room for a small tramway, 0·30 metre gauge (11·8 in.), to be laid beside the carriage. The débris is filled into small trucks running on the tramway, and from these into the tipping wagons behind the carriage.

The carriage is arranged for six drills working together. These are placed three on each side, one above the other, the middle one being shown dotted in Fig. 13, Plate 12; and are mounted in sockets carried upon arms which can be moved by means of screws; the workmen standing at the side are able to manage these with facility. In order that the drills may be directed to any point in the face and at any angle, the sockets at the front end AA are made capable of sliding laterally along the arms BB, Figs. 14 and 15, so as to traverse inwards or outwards as required. The movement is given by screws S lying parallel to the arms. The arms are raised or lowered as a whole by means of the vertical screws C. The arms in rear DD, Figs. 13 and 14, can also be raised or lowered by the vertical screws T; and the sockets EE on the arms can swivel round them, so as to incline the drills at the required angle to the vertical.

5. Removal of Spoil.

The rock, after being blasted, was loaded into wagons, and hauled out of the tunnel by small locomotives worked by compressed air. At the face of the heading the rock was first loaded into small tip wagons, which were run back on the narrow-gauge tramway already described, past the drilling machines, and then

tipped into ballast wagons on a lower level. The locomotives, shown in Figs. 16 and 17, Plates 14 and 15, were built by Schneider & Co. of Creusot. The frames, springs, wheels, cylinders, cranks, reversing gear, &c., are all similar to ordinary locomotives. On the frame is mounted a cylindrical reservoir A containing the air under pressure. The pressure of course diminishes during the journey. From the reservoir the air passes through an automatic expander R, where it is expanded down to the cylinder pressure, which is always kept the same. Between the expander and the cylinders it passes through a small reservoir B, which acts as a heater, and at the same time prevents shocks to the valves when the engine is started or stopped. The pressure in the main reservoir A is limited only by the power of the air-compressors, and the tightness of the joints in the pipes. In practice it reached 14 atms. (206 lbs. per sq. in.). By a special arrangement the compressors could be supplied with air already compressed to 7 atms., at times when the efficiency would have been too low, if compressing direct to 14 atms.

The expander R, shown enlarged in Fig. 18, Plate 14, is composed of a vertical cylinder AA, communicating by a pipe Z with the main reservoir, and partly surrounded by a jacket B. This jacket is filled with the partially expanded air, which can pass into it through two series of holes, *aa* and *bb*. From the jacket it passes to the engine cylinders through the pipe Y. At the lower end of the cylinder, next to the holes *bb*, there is a solid cover; the upper end communicates with the atmosphere. Within the cylinder works a piston-rod H, carrying two pistons. Of these the upper one is of the ordinary form, but the lower is prolonged into a trunk, pierced with holes *ee*. The stroke is such that the bottom of the trunk never covers the holes *bb*; so that the bottom end of the cylinder below the trunk is always in communication with the jacket. The upper end of the piston-rod carries a plate K, and a spiral spring N holds this plate apart from another plate L, whose distance from the cylinder can be regulated by means of the screw M. This plate L being fixed, the spring tends to keep the trunk at the bottom of its stroke, and so to keep the holes *ee* opposite the holes *aa*, as shown in Fig. 18. If compressed air now enters through the pipe Z, it passes through these holes into the jacket B, and thence through the holes *bb* into the space beneath

the trunk, where, its pressure being greater than the atmosphere, it tends to push the trunk upwards against the pressure of the spring. If its pressure be greater than the total resistance, the trunk rises, the holes *ee* become blind with those *aa*, and the air ceases to pass into the jacket. Now suppose the pipe Y to be opened, so that the air in the jacket escapes to the engine. Then the upward pressure on the bottom of the trunk diminishes, the trunk descends, and the holes *ee* become partly open to those *aa*. The result of these two tendencies is that the area of the holes *ee* which is open to *aa* is kept of such magnitude as will cause the pressure of the air in the jacket to balance exactly the reaction of the spring. The trunk is thus kept in equilibrium, and the pressure at which the air passes to Y is kept constant. Its amount can be varied if necessary by screwing up the spring.

The heating apparatus is on the Mékarski system. The heater B, Figs. 16 and 17, Plates 14 and 15, holds 390 litres (13·77 cub. ft.), and is fitted with pipes and gauge-cocks for showing the water-level in the interior—glass gauge-tubes not being applicable on account of the severe shaking and shocks to which the engine is exposed. The heater and the pipes leading to it are clothed with wood and felt. The mixture of compressed air and water passes out of the main reservoir through a pipe P, furnished with a cock and passing to the bottom of the heater, where, in order to divide the air into thin jets, it terminates in a rose. These jets are heated by the hot water, and the air then rises to the top of the heater, whence it is conveyed to the expander R. From this it passes to a pipe S running between the main frames, and dividing into two branches, which lead to each of the working cylinders.

To charge the engine, the cock between the main reservoir A and the heater B is closed, and the inlet pipe of the heater is coupled to a pipe leading from a fixed boiler. There are two outlet pipes from this boiler, one in the steam space and one in the water space, so as to give steam or water as required. The lower is first coupled to the heater, which is then filled with water up to the required level. This pipe is then shut off and the heater coupled to the other, and filled with steam up to the desired pressure. During the same time the main reservoir A has been coupled to a pipe leading from the

compressed-air mains, and has thus been recharged with compressed air. When the charging is completed the inlets are closed, and the cock between the main reservoir and the heater is opened: the engine is then ready for working. The pressures are ascertained by three gauges, one on the main reservoir, one on the heater, and one on the pipe leading to the working cylinders.

The principal dimensions &c. of the engines are given below.

Capacity of the large reservoir . .	7·600 c.m.	268 c. ft.
Internal diam. of do. . .	1·700 m.	5·58 ft.
Length of do. . .	3·550 m.	11·64 ft.
Thickness of steel shell plate . .	0·015 m.	0·59 in.
Thickness of the dished ends. . .	0·017 m.	0·67 in.
Capacity of the heater	0·390 c.m.	13·77 c. ft.
Internal diam. of do.	0·800 m.	2·62 ft.
Length of do.	0·880 m.	2·89 ft.
Thickness of steel in do.	0·012 m.	0·47 in.
Diam. of cylinder	0·204 m.	8·03 in.
Stroke of cylinder	0·360 m.	14·17 in.
Diam. of tread of wheels . . .	0·760 m.	2·49 ft.
Volume swept through by piston in each stroke	0·0117 c.m.	0·413 c. ft.
Volume swept through by both pistons per metre forward . .	0·0196 c.m.	0·692 c. ft.
Absolute initial pressure of compressed air in the principal reservoir	12 kg. per sq. cm.	171 lbs. per sq. in.
Constant absolute pressure on entering the cylinders	4 kg. per sq. cm.	57 lbs. per sq. in.
Extreme length of engine from buffer to buffer	5·000 m.	16·40 ft.
Weight of engine (about) . . .	7·400 tonnes.	7·4 tons.

6. COST.

The cost of the tunnel cannot be given with any great exactness, but the total cost may be taken as follows :—

(1) Blasting of tunnel, making of water-courses, &c. .	41,700,000 francs.
(2) Masonry, etc., inside the tunnel	13,300,000 „
(3) Do. outside „	600,000 „
Total	55,600,000 „

To this must be added the cost of various extra works, of the preliminary work of triangulation &c., of repairing of damages, of ballasting and laying the line, of materials, signals, telegraphs, &c., which together may be taken at 2,000,000 fr. This makes the total cost of the tunnel about 58,000,000 fr., or for a length of 14,890 metres 3900 francs per metre (£140 per yard), or in round numbers £250,000 per mile. With regard to special items, the cost of blasting was on the average about 46 fr. per cb. m. (28*s*. per cb. yd.). The cost of walling per cb. m. may be taken as follows:—

Wages	13 francs.
Hewing and transport of stone, and selection and transport of rubble for packing	48 „
Hydraulic mortar and cement	6 „
Centres, scaffolding, &c.	3 „
Superintendence, &c.	6 „
Total	76 „

(Say 46*s*. per cubic yard.)

This however is rather the contract price than the actual cost; the latter was much reduced by using the rock blasted on the spot to make the masonry. Again, for the greater part of the length this masonry was merely a lining put in for security, the rock being amply strong enough to stand without it.

General Conclusions.

In conclusion, the points connected with the construction of this tunnel, which seem particularly to call for notice and comment, may be stated as follows:—

(1) The advantage in such cases of constructing a long tunnel at a comparatively low level, instead of a shorter tunnel at a higher level.

(2) The proper position of the leading heading in the section, and the proper mode of completing the full section from it.

(3) The best construction and arrangement of the turbines and air-compressors, to utilise a comparatively small quantity of water at a very high pressure and velocity.

(4) The best construction and arrangement of the drilling machines.

(5) The best means of keeping a long heading cool, in view of the very great loss of efficiency which is found to result from too high a temperature.

It is only on the first two of these points that any remarks will be made on the present occasion.

With regard to the first of these points, the superior limit to the level at which such a tunnel should be made has been shown above to be fixed by considerations of climate. The inferior limit to its position is determined on the one hand by the length, as influencing the time and cost of construction, and on the other hand by the height of the overlying strata above the tunnel, as influencing the heat within the heading. From observations made at the St. Gothard and elsewhere we may assume that the limit of temperature at which men can work at all in a tunnel is 50° C. (122° F.) in dry air, and 40° C. (104° F.) in air saturated with moisture. The observations at Mont Cenis and the St. Gothard also go to fix the relation between the depth below the surface and the internal temperature. At the St. Gothard the average increase appeared to be 2° C. per 100 metres vertical height (or say 1·1° F. per 100 ft. vertical height). The form of the overlying mountain, and the nature of the rock, have of course also an influence on the temperature. The amount of water to be expected is a matter on which it is generally impossible to speak with any certainty; but a long tunnel will always be more or less wet. Many modes have been suggested for drying and cooling the air within the heading, but there is little to be said practically as to their efficiency. The air used for ventilation is found to have little influence in either direction. These considerations have a practical bearing, for example, on the proposed Simplon Tunnel, which is to be nearly 12 miles long and only 2300 ft. above the sea. In this case the temperature of the rock would be about 47° C. (116° F.) according to the rule given above, as determined for the St. Gothard by Dr. Stapff. If the tunnel were raised to a level of 2600 ft., with a length of 10 miles, the temperature would be about 40° C. (104° F.); while if it were raised to a level of 3600 ft. with a length of 7½ miles, the conditions would be about the same as in the St. Gothard Tunnel. It follows that the

longest of these projected tunnels could not be made in the same way as was practised at the St. Gothard, and some improved method would have to be sought for.

As to the second point, *i.e.* the actual mode of driving the tunnel, the results obtained at the St. Gothard are of great interest. In the improvement of the drilling machines, and the employment of dynamite, that tunnel had a great advantage over the Mont Cenis; and accordingly the progress of the first heading was much more rapid. On the other hand the completion of the tunnel lagged much further behind. At the Mont Cenis the tunnel was opened for traffic 9 months after the junction of the headings, whilst the interval was 22 months at the St. Gothard. There arises therefore a question how the improved rate of progress, which has been achieved for the heading, may be extended to the work of completion.

Whilst in the Mont Cenis tunnel the leading heading was driven along the bottom of the section, M. Favre adopted the opposite course at the St. Gothard, and drove the heading along the top. In 1874 this method was sharply criticised by Professor Rziha and others; and although the discussion led to no very definite result, the Arlberg tunnel is being driven by means of a bottom heading. These works have been two years in progress; the rate of advance in the heading is half as great again as at the St. Gothard, and the completed work follows as closely behind it as it did at the Mont Cenis. Herr Bridel, chief engineer of the St. Gothard Railway, and formerly a supporter of the Belgian or top-heading method, has written a report comparing the two methods (top heading and bottom heading) under the three following heads:—

1. Influence of each method on the rapid completion of lengths already pierced by the heading.

2. Influence on the power of keeping back the pressure of soft rock.

3. Influence on the cost of construction.

His results are as follows.

Completion of Tunnel.—With regard to the first head, it is very important, where drilling machines are used in the enlargement of the heading, to have as many points of attack as possible, so that the workmen may not be too much crowded together. With a bottom

heading this is attained by adopting what is called the English system, in which openings are commenced in the sides and roof of the heading at a number of different places, corresponding to the rate at which the heading itself advances. It is obvious that the spoil from the furthest of these openings can be carried past the others without difficulty; which would not be possible in the case of a top heading, where the opening would have to be made in the floor and not in the roof. The bottom heading was adopted at the Mont Cenis tunnel, and also at the Arlberg tunnel; and in the latter, in spite of the much more rapid advance of the heading, the completed tunnel on 31st July, 1882, was only 1090 yds. behind the face of the heading on the West side, and 750 yds. on the East side. The same system, with slight modifications, was adopted at the Laveno tunnel, 1·9 mile long. Here the junction of the headings took place 368 days after the commencement, giving an average advance for the two ends together of 8·15 metres (26·7 ft.) per day. In the last month the advance was 37·7 ft. per day. Top headings were here carried forward at the same time as the bottom headings, and their junction took place two months after that of the latter. Openings were made at short intervals from the one to the other, and the spoil from the top heading was thrown down through these into wagons below. The completion and walling of the section did not lag behind; and the tunnel was open for traffic 4½ months after the junction of the bottom headings, and only 16½ months from the commencement of the work.

On the other hand, in the case of the St. Gothard Tunnel, the whole length under construction in October 1877 (a time when the works were in an exceptionally regular condition) was 2750 metres (say 3000 yds.); which may be compared with 1260 yards in the case of the Arlberg tunnel. Even theoretically, the length under construction with the method adopted at the St. Gothard can never be less than 2600 yards. Assuming a maximum progress of 165 yds. per month, it follows that the tunnel cannot be completed until 15·8 months after the junction of the headings. As a matter of fact the actual interval was over 21 months. In the Arlberg tunnel on the other hand the completion may be expected to follow within 5 months from the junction of the headings.

On the whole it would seem that the method of driving a top heading is not the best for any tunnel where machine drills are used for the sake of rapid completion of the work.

Pressure of Rock.—Where the rock is of a gravelly nature, so that it exercises great pressure, but is not itself compressible, both theory and practice show that if the Belgian method be adopted, and the arch put in without abutments, a sinking and crushing in of the arch cannot be prevented. The same is yet more certain where the rock is of a clayey or plastic nature, as has been shown on the line from Foggia to Naples, and also in the "pressure length" of the St. Gothard tunnel. Here it was found in many places impossible to complete the arch at all on the Belgian method; it was absolutely necessary to begin with the abutments and invert. In wet earth the Belgian method is clearly quite inapplicable.

Herr Bridel has drawn the following conclusions on this subject:—

a. The Belgian method is not safe where there is great pressure, and especially where the rock is plastic.

b. Even where all possible precautions are taken, the work is extremely difficult, slow, and expensive, and the success always doubtful.

c. With a top heading, the English method of completing the tunnel is possible indeed, but exceedingly costly, difficult, and slow.

d. With a bottom heading, this method is capable of any amount of development, and renders possible a much more rapid advance.

e. In a long tunnel it is impossible to tell whether plastic strata, or others exercising great pressure, will be met with, through which it would be necessary to drive a bottom heading. But it is exceedingly difficult to pass from working by a top heading to working by a bottom heading.

All the above conclusions point to the superiority of the bottom-heading system.

Cost of Construction.—The experience gained on this head leads to the following conclusions, as drawn up by Herr Bridel:—

a. With forced working (*i.e.* where the progress is to be as rapid as possible), when the conditions as to ventilating and drying the tunnel are the same, the general cost of blasting is nearly the same whether the leading heading is at the top or at the bottom.

b. The drying and ample ventilation of the working places are however much more difficult with a top heading than with a bottom heading, so that the latter system is really superior in these respects.

c. The removal, loading, and transport of the spoil is done much more easily, quickly, and cheaply with the bottom heading than with the top heading.

d. The formation of drains, and the laying of roads and of air and water pipes, are extensive and costly works with a top heading, but are a small matter with a bottom heading.

It follows that, where rapid progress is necessary, the bottom-heading system is to be preferred to the other.

At the Arlberg tunnel the contract price at 3 to 4 kilometres from each portal (which is about the average distance at the St. Gothard), and where the walling is thinnest, is as follows :—

	Fr. per metre.
Bottom or leading heading	374
Top heading, following it	242
Completion, except masonry to drains	1430
Masonry to drains	57
Total	2103
Add 3½ per cent. for extras	73
Add interest on cost of plant, &c., supplied by the railway company (taking this as the same as at the St. Gothard)	470
Grand Total	2646
	(say £96 per yard.)

On the other hand the contract price at the St. Gothard tunnel was as follows :—

	Fr. per metre.
Total except masonry	2800
Masonry, minimum thickness	830
Total	3630
	(say £132 per yard.)

There is thus a difference in favour of the Arlberg tunnel of 984 fr. per metre (£36 per yard). This difference is certainly more than can be accounted for by the somewhat harder character of the rock at the St. Gothard: and thus confirms the conclusion that, at least with forced working, the bottom-heading system is the cheaper of the two.

Abstract of Discussion.

The CHAIRMAN (GEORGE B. RENNIE, Esq.) said they would all agree with him that the paper was a most interesting one, and his only regret was that it was then too late to have a discussion upon it. Herr Wendelstein had come from Switzerland expressly to be present, and with the permission of the members would like to make a few remarks.

Herr WENDELSTEIN (speaking in French) said he very much regretted not being able to speak to the members of the Institution in their own language. He wished to express his thanks to the President for the confidence he had placed in him in requesting him to bring forward his paper; and to the Secretary for his valuable assistance in the preparation of the paper and the diagrams. The members present were no doubt well acquainted with the enormous mountain chain of the Alps, its torrents, its avalanches, and its glaciers; and he need not say the project of crossing such a chain of mountains by a railway must be a deeply interesting one. The entire subject of the construction of that railway, in all its details, was far too wide to be entered upon in a single paper. He had therefore dealt with the "great tunnel alone," but even that was too wide a subject to be considered in its entirety; and he had therefore confined himself to points of mechanical interest, reserving for a subsequent occasion certain physical and physiological questions, relating to ventilation, &c. The tunnel was at present the longest in the world; but he hoped that the example having been set at the St. Gothard, others would not be slow in following it. Indeed the Arlberg tunnel, which was being now rapidly pushed forward, had profited largely by the experience gained in the construction of the St. Gothard. The Simplon tunnel was at present under discussion, and he hoped that before long both would be exceeded by the Channel tunnel, which would be about double the length of the St. Gothard.

The CHAIRMAN said the author had asked permission to lay before the meeting the following letter from Herr Dapples, Chief Government Inspector of Swiss Railways:—

"BERNE, *January* 23, 1883.

"MY DEAR MR. WENDELSTEIN,

"Your paper on the St. Gothard tunnel I have read with much interest, and found it in general conformable to facts.

"After the experience now obtained in the three long Alpine tunnels, the majority of competent engineers will probably agree with your conclusion, that, where rapid progress is necessary, the bottom-heading system is to be preferred to the other.

"The main advantage of a bottom heading lies in the facility and security of rapid transport, such transport being the main factor in rapidity of work in general.

"The Belgian system of tunnel working has sometimes economical advantages in short tunnels, when there is plenty of time for carrying out the works.

"As to the failure of the first masonry at section 2800, it should perhaps be ascribed to the many faults committed by the contractor, more than to the Belgian method itself. Such crushing of masonry by heavy pressure may also occur when other tunnelling methods are employed, and has for instance already occurred in the Arlberg tunnel.

"As to the probable highest temperature during the works in the projected Simplon tunnel, which you assume would be about 47° C. (116° F.), I observe that those who have made an especial study of the matters concerning the Simplon railway give a probable maximum of temperature of 35° C. (95° F.) as resulting from their latest investigations.*

"Very faithfully yours,

"ERN. DAPPLES."

---

* In reference to this letter Herr Wendelstein points out that the manner in which the use of the Belgian method had caused failure in the completion of section 2800 had been fully gone into in the paper itself. It was there stated that to the mistakes committed in the first treatment of the evil, together with the increased disturbance of the ground thereby occasioned, and the consequent difficulty in accomplishing the work, the failure must be unhesitatingly ascribed. What is further said as to this portion of the tunnel might apply to the whole up to a certain point. The increased expenditure of time and money

He had now to propose a hearty vote of thanks to Herr Wendelstein, not only for kindly preparing his paper, but for coming from Switzerland to be present at its reading. It was always a matter of satisfaction to the members to have the assistance of foreign engineers, who were willing not only to prepare papers, but to come personally amongst them, and give the results of their experience by word of mouth.

---

was chiefly occasioned by the unfortunate choice of the Belgian system, as well as by the insufficient supply of many necessaries, especially with regard to ventilation, so that the power of the men employed was not properly developed.

As regards the projected Simplon tunnel, the paper referred only to the line running underneath the Monte Leone, which rises here to 3565 metres above the sea (10,700 ft.). The Commission, profiting by the experience obtained at the St. Gothard, now proposes to take a line several kilometres more to the north-east, and also winding considerably, so that the tunnel may lie under the bottom of the Cherasca valley. It will thus be 20 kilometres in direct length (12·4 miles). It is believed that by adopting this course a temperature not exceeding 35° C. will be encountered, in which it is assumed human labour will be quite possible. It is intended also eventually to sink at either end of the middle length of the tunnel, which will be from 8 to 9 kilometres long (5 to 5½ miles), ventilating shafts about 800 metres in depth (2600 ft.), for the purpose of maintaining a favourable temperature throughout. As far as can be judged, a higher temperature must be encountered in the Simplon tunnel than in the St. Gothard, where it never exceeded 30·75° C.; and this high temperature must also be continued for a longer distance, because of the greater length of the tunnel. Should the tunnel therefore be undertaken, the question of neutralising the injurious influences of the heat must be seriously faced; but this point will be discussed in a subsequent paper.

St GOTHARD TUNNEL.

Fig. 1. *Plan of the St Gothard pass, with line of Tunnel.*

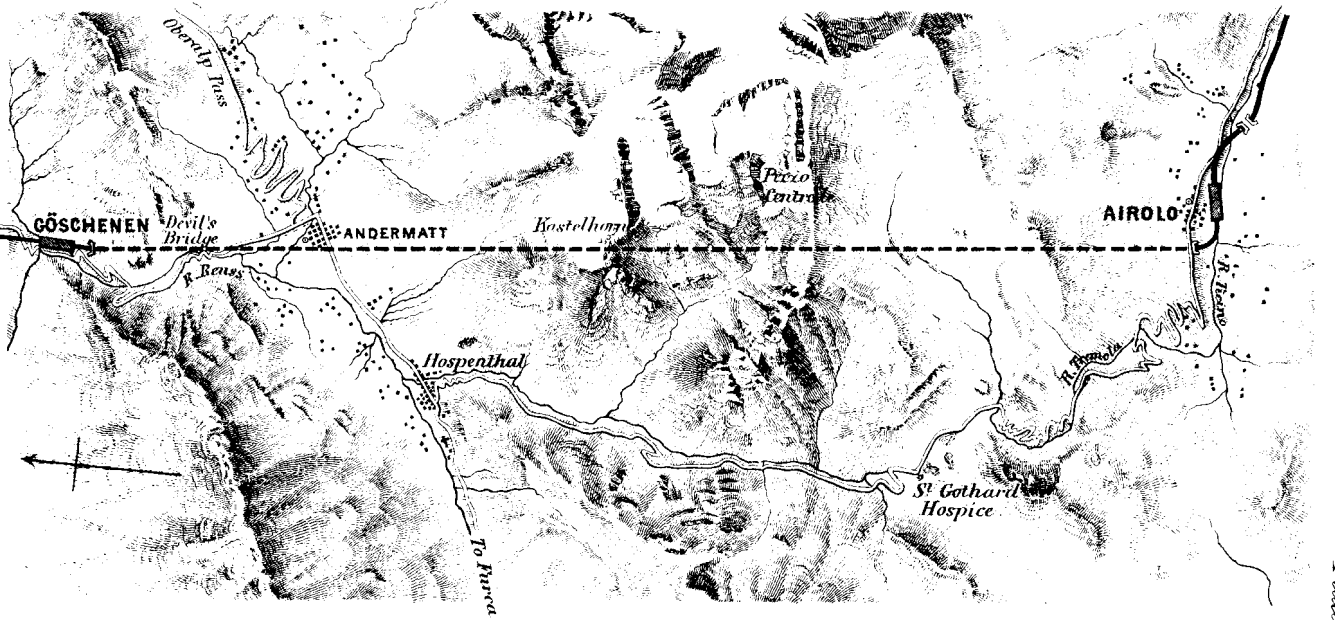

(Proceedings Inst. M.E. 1883.)

Scale 1 to 100,000.

Plate 6.

St GOTHARD TUNNEL.

Plate 7.

Fig. 2. *Section of Rocks along line of Tunnel.*

Scales, vertical and horizontal, 1 *to* 50,000.

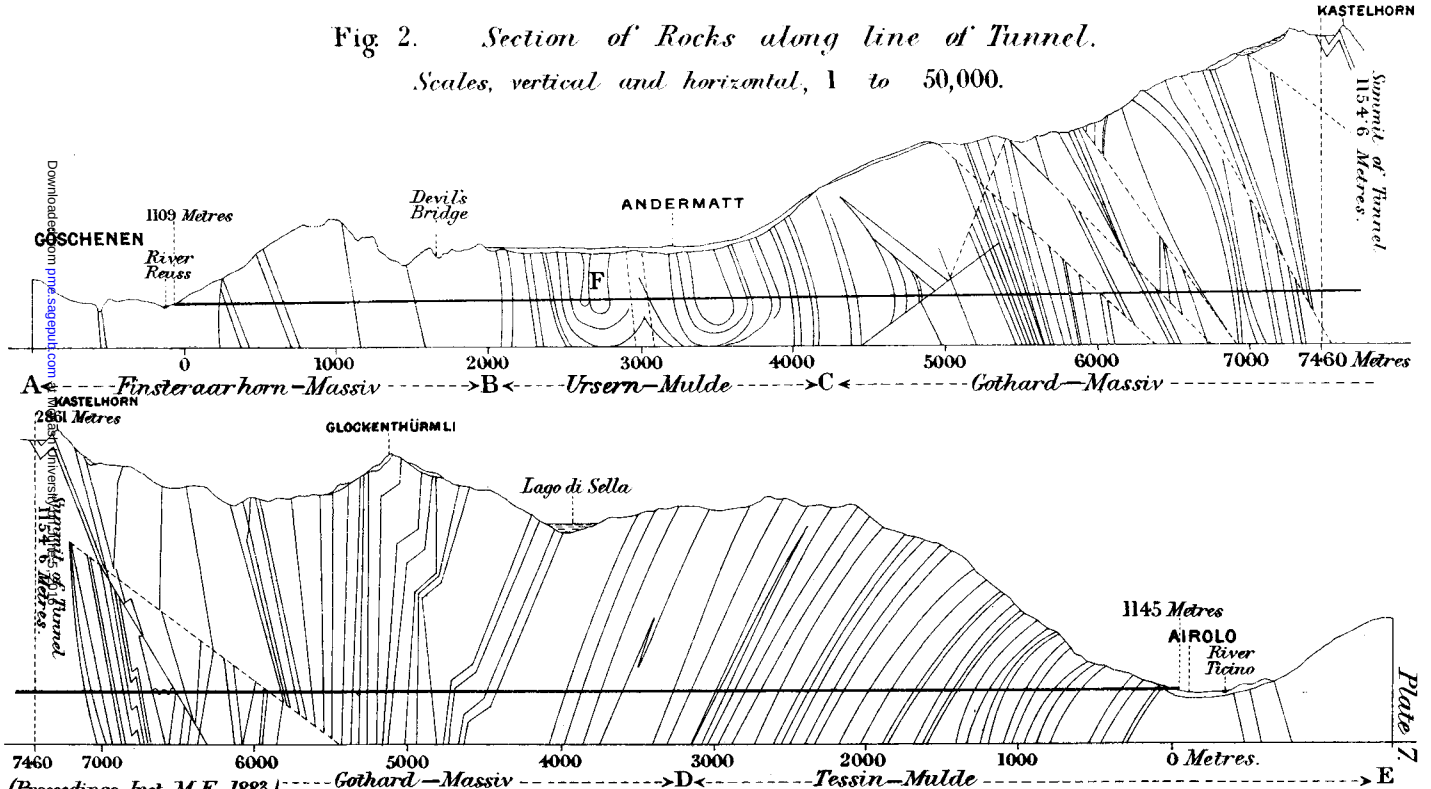

Plate 7.

(*Proceedings Inst. M.E. 1883.*)

Fig. 3. *Section showing mode of driving. Scale 1 to 200.*

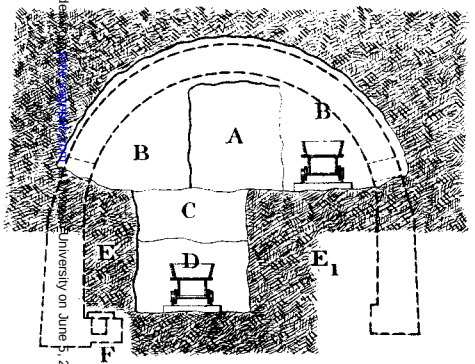

Fig. 5. *Elevation of Turbine and Gearing, Airolo. Scale 1 to 60.*

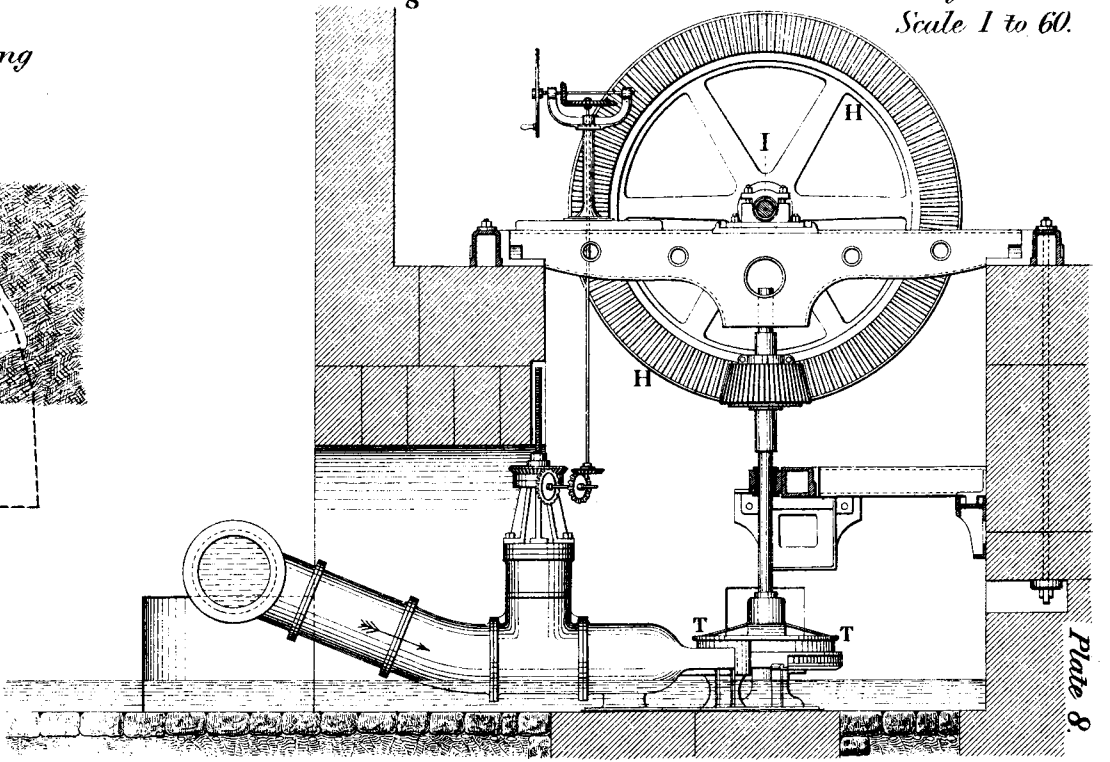

Fig 4. *Plan of Turbine Shop, Airolo.*

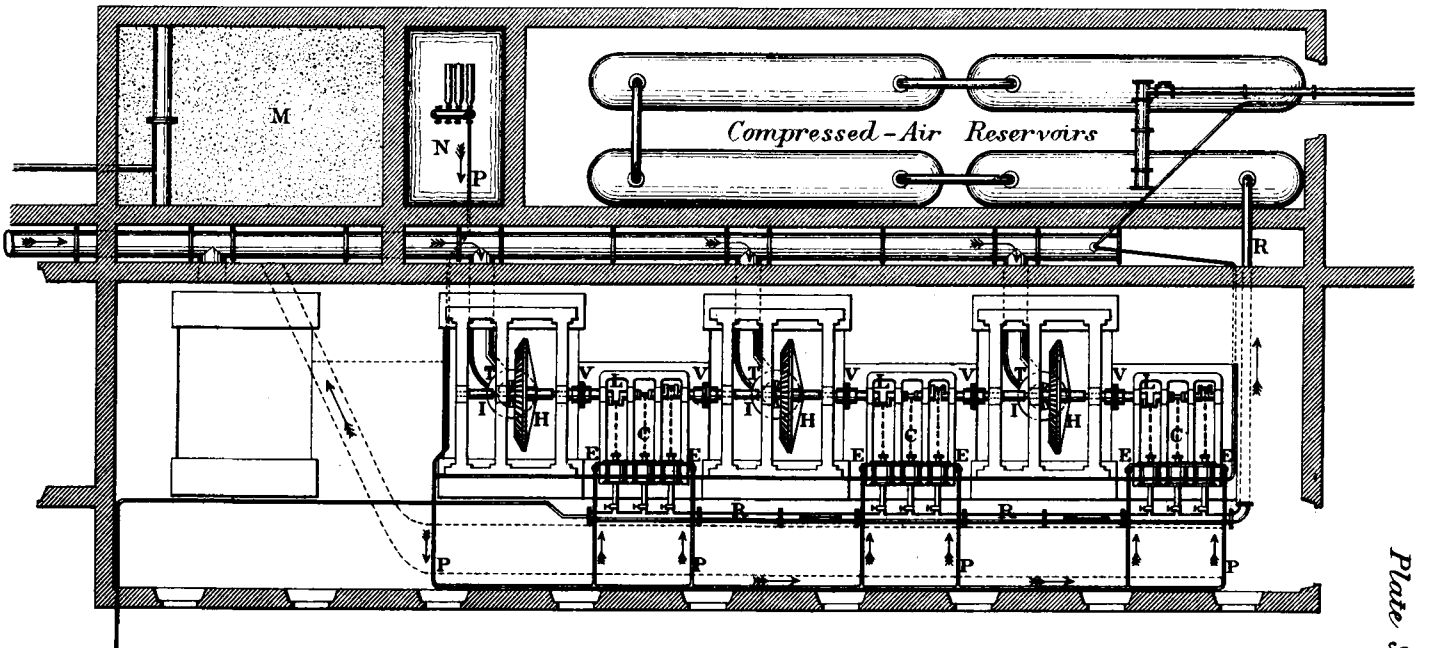

(Proceedings Inst. M.E. 1883.) *Scale 1 to 200.*

Plate 9.

St GOTHARD TUNNEL.

Fig. 6. *Section of Air-Compressor*

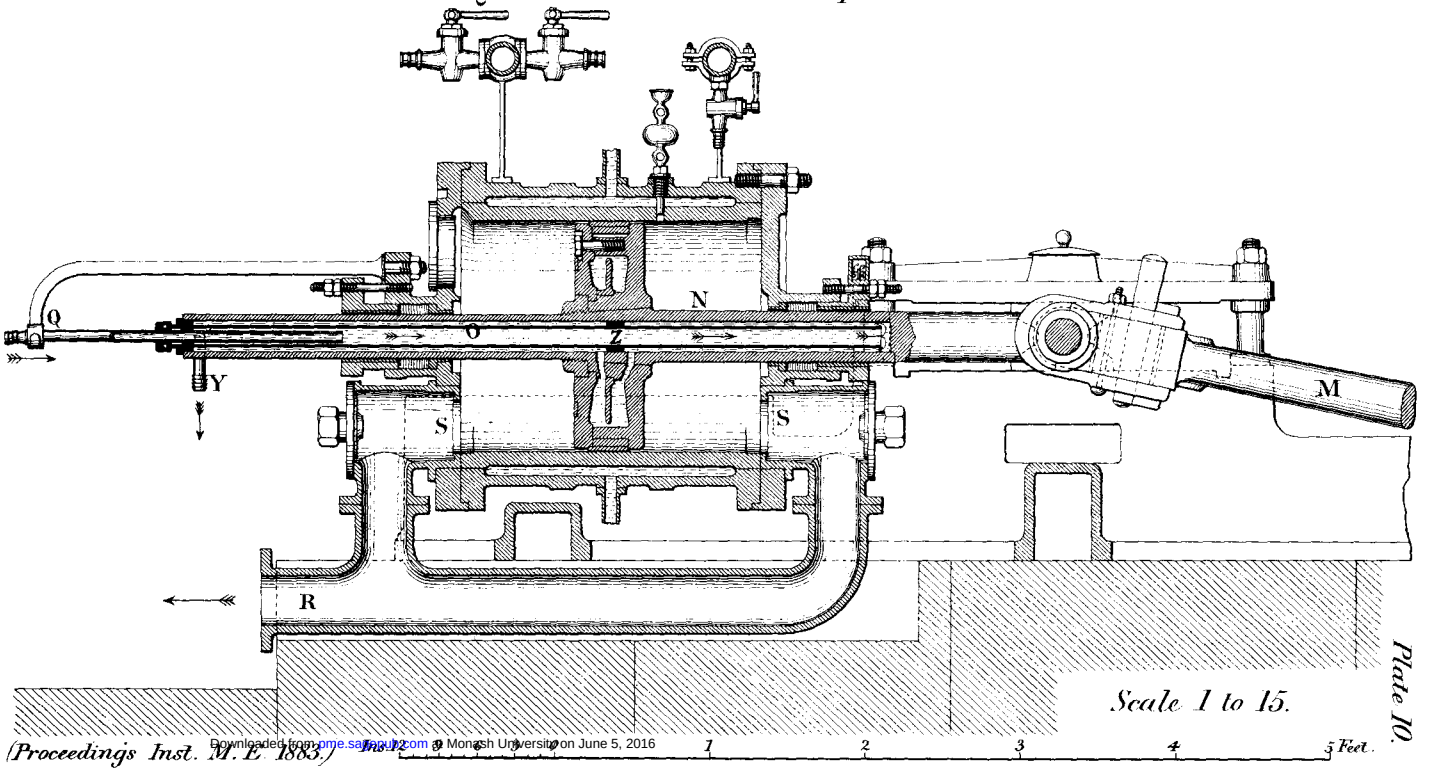

Plate 10.

St GOTHARD TUNNEL.

Improved Ferroux Drill.

Fig. 7. *Longitudinal Section.*

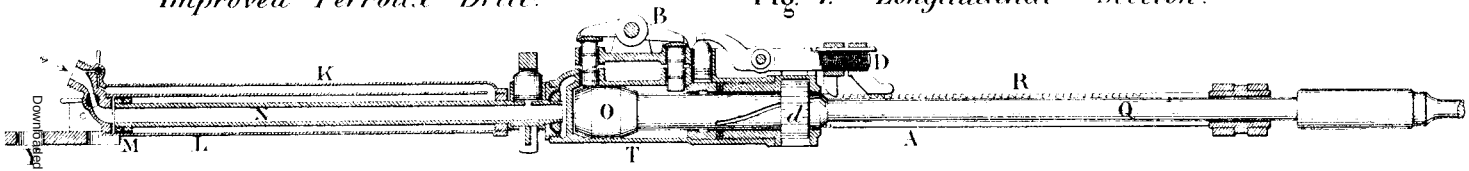

Scale 1 to 15.

Fig. 8. *Plan.*

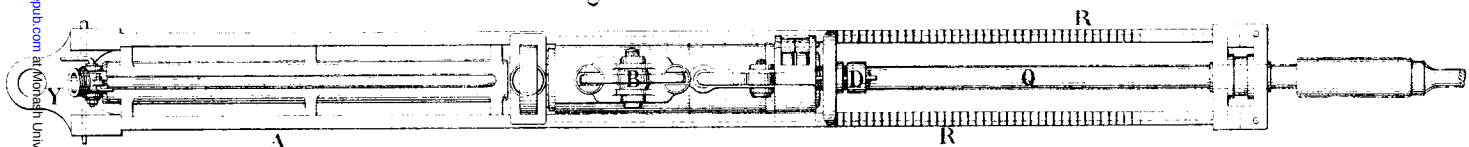

Fig. 9.
Rear End.

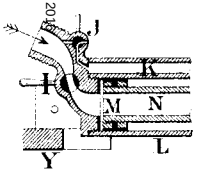

Fig. 10. *Striking Cylinder.*

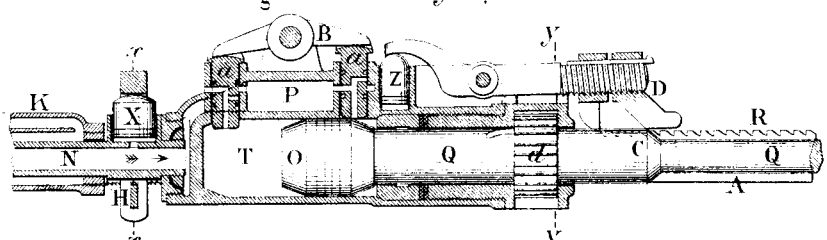

Fig. 11.
Section at x x.

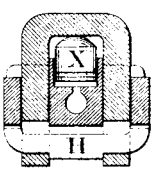

Fig. 12.
Section at y y.

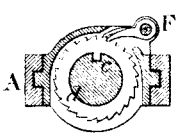

Figs. 9 to 12. Scale 1 to 10.

St GOTHARD TUNNEL.

Fig. 13. *Elevation of Drill-Carriage.*

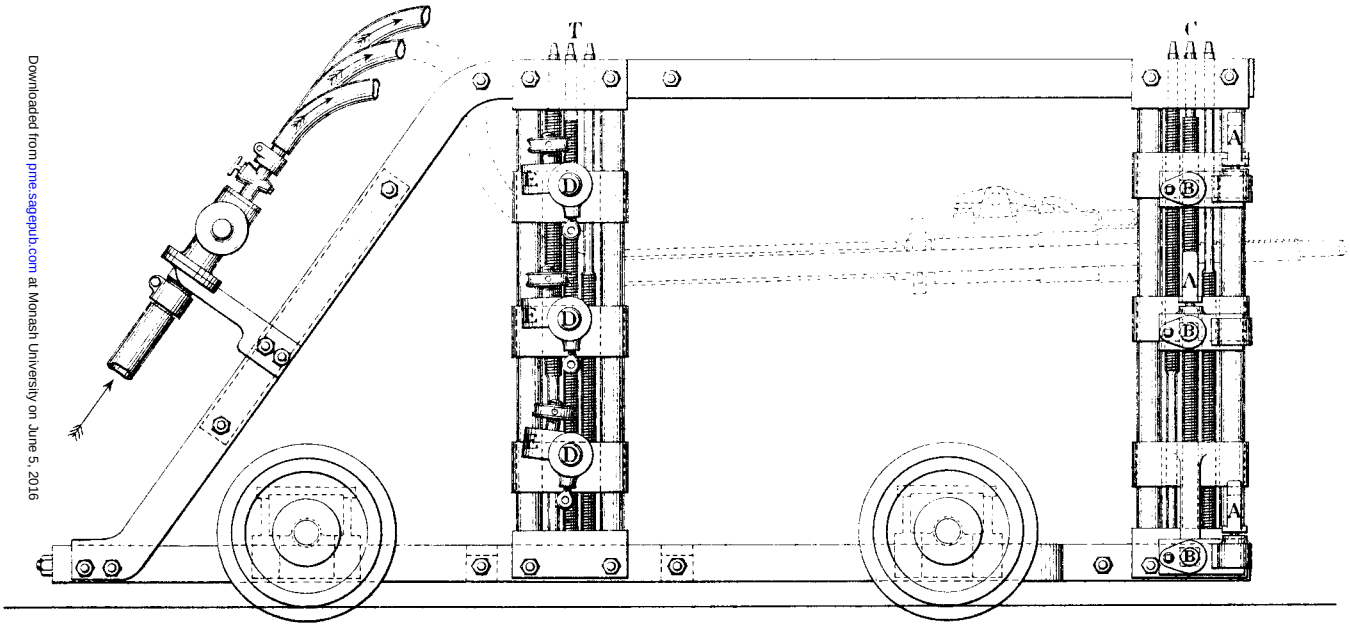

(Proceedings Inst. M.E. 1883.)

Scale 1 to 20.

Plate 12.

Fig. 14. *Plan of Drill-Carriage.*

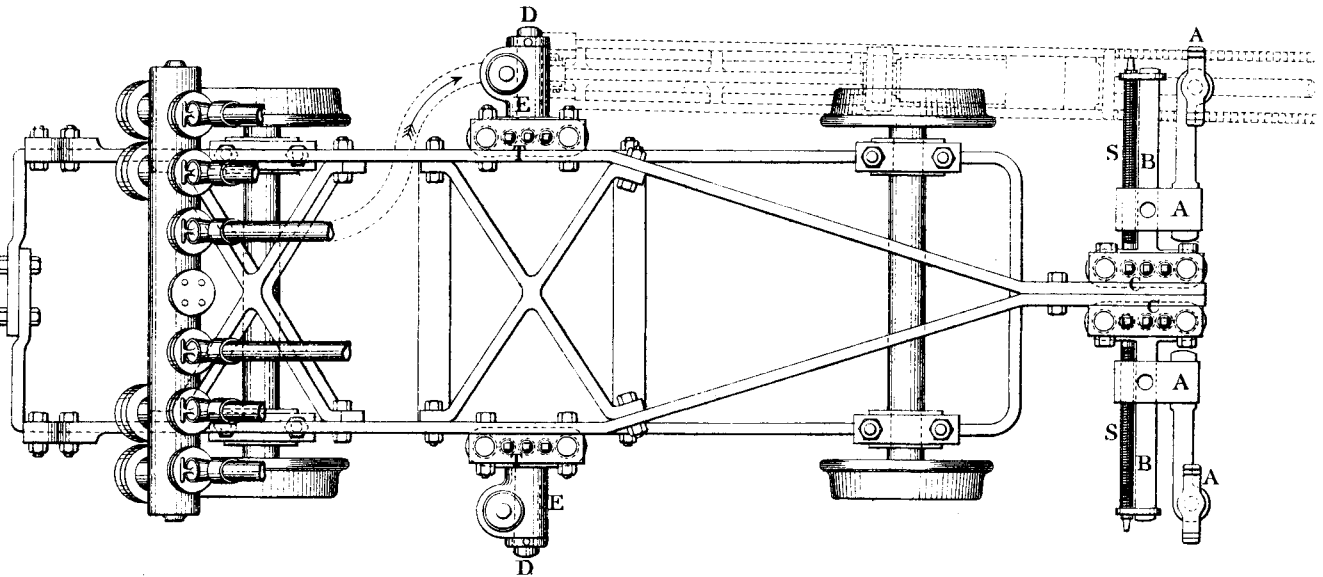

(Proceedings Inst. M.E. 1883.)

Scale 1 to 20.

Plate 13.

ST GOTHARD TUNNEL.

Plate 14.

Fig. 15. *Half Elevation of Drill Carriage. Scale 1 to 16.*

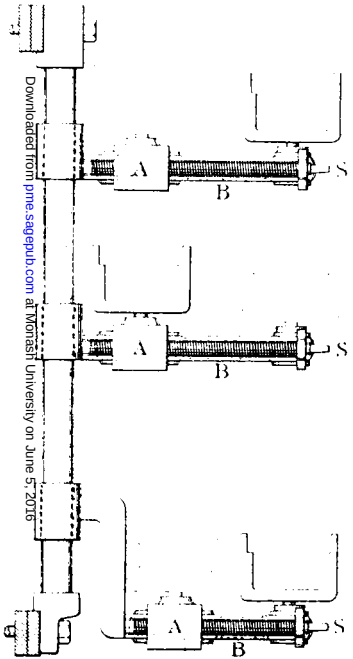

(Proceedings Inst. M.E. 1883.)

Fig. 17. *End Elevation of Air Locomotive.*

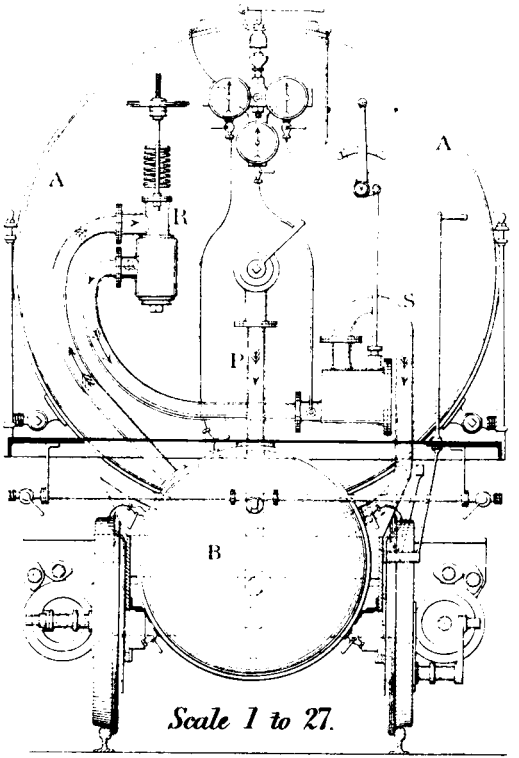

Scale 1 to 27.

Fig. 18. *Section of Expander.*

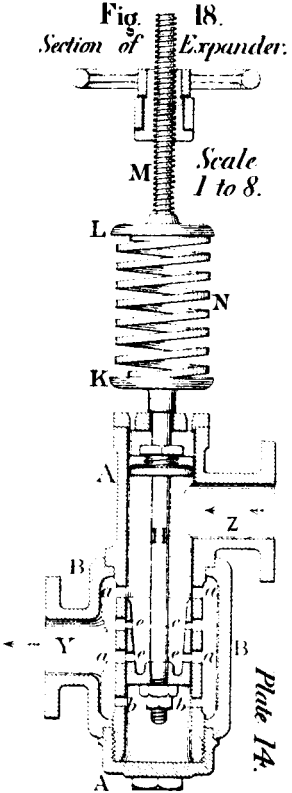

Scale 1 to 8.

Plate 14.

St GOTHARD TUNNEL.

Fig. 16. *Side Elevation of Air Locomotive.*

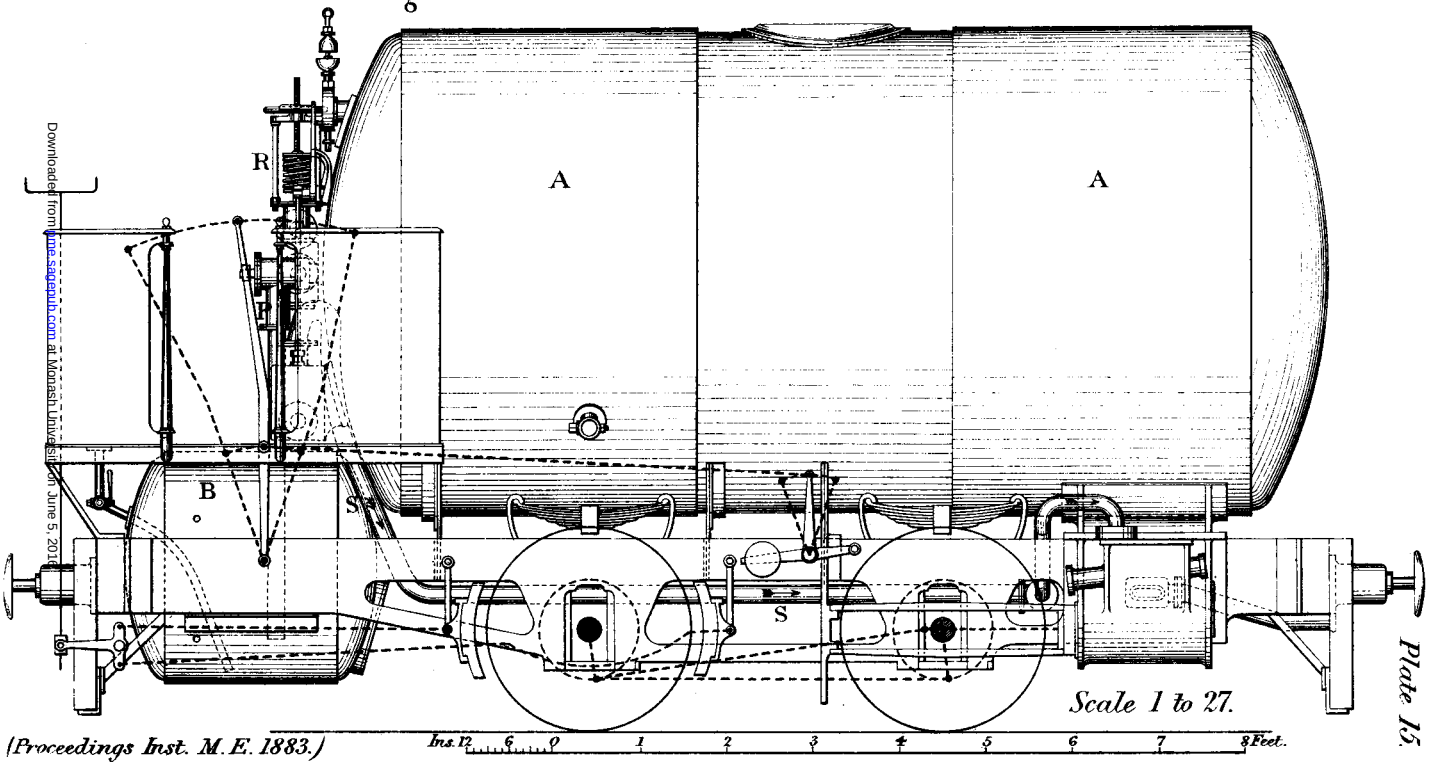

(*Proceedings Inst. M.E. 1883.*)

Plate 15.