Renewable and Sustainable Energy Reviews 14 (2010) 2039–2048

Contents lists available at ScienceDirect

Renewable and Sustainable Energy Reviews

journal homepage: www.elsevier.com/locate/rser

Life-cycle uses of water in U.S. electricity generation

Vasilis Fthenakis [a,b,*], Hyung Chul Kim [b]

[a] Department of Energy Sciences and Technology, Brookhaven National Laboratory, Upton, NY, United States
[b] Center for Life Cycle Analysis, Columbia University, New York, NY, United States

ARTICLE INFO

Article history:
Received 3 February 2010
Accepted 3 February 2010

Keywords:
Life cycle
Water use
Electricity
Renewable energy
Photovoltaics

ABSTRACT

Water use by the electric power industry is attracting renewed interest as periods and zones of arid weather are increasingly encountered, and various regional energy-production scenarios are evaluated. However, there is a scarcity of data on upstream water factors and discrepancies of data from different sources. We reviewed previous studies of water use in electricity generation and used full-life cycle accounting to evaluate water demand factors, both withdrawal and consumption, for conventional- and renewable-electrical power plants. Our investigation showed that moving to technologies like photovoltaics and wind offers the best option for conserving our water supply. We also emphasize the importance of employing a transparent, balanced approach in accounting life-cycle water usages.

Published by Elsevier Ltd.

Contents

1. Introduction . . . 2039
2. Scope of the analysis . . . 2040
3. Water usage during fuel acquisition, preparation, and device/plant construction . . . 2040
   3.1. Thermoelectric fuel cycles . . . 2040
   3.2. Renewable fuel cycles . . . 2041
4. Water usage factors of power-plant operation . . . 2042
   4.1. Thermoelectric power plants . . . 2042
   4.2. Renewable energy power plants . . . 2045
5. Comparison of life-cycle water factors . . . 2045
6. Discussion . . . 2046
7. Conclusion . . . 2047
   Acknowledgements . . . 2047
   References . . . 2047

1. Introduction

Although water is an indispensable resource for economic development, its availability in the United States has not been assessed comprehensively in 25 years [1]. Nevertheless, the current trend indicates that demands on the nation's supplies are growing, while our capacity to store surface-water is becoming more limited, and ground water is being depleted. Predicted drought in some areas might well exacerbate this shortage. Electricity generation via conventional pathways accounts for a major part of water demand. The United States Geological Survey (USGS) estimated that in 2005 thermoelectric power plants withdrew approximately 41% of our freshwater, closely followed by 37% for agricultural irrigation [2]. In an effort to reduce the specter of water shortage in the future, new thermoelectric power plants are instituting water-saving technologies based on recirculating their cooling water or dry cooling. A national level appraisal by the U.S. DOE in 2009 predicts that by 2030 the freshwater water withdrawal for generating electricity could fall 4–23% from the level of 2005 if this trend continues [3].

* Corresponding author at: Department of Energy Sciences and Technology, Brookhaven National Laboratory, Upton, NY, United States. Tel.: +1 631 344 2830; fax: +1 631 344 3957.
E-mail address: vmf@bnl.gov (V. Fthenakis).

1364-0321/$ – see front matter. Published by Elsevier Ltd.
doi:10.1016/j.rser.2010.03.008

In contrast, renewable energy sources, such as photovoltaic- and wind-power, use no water during their operation. However, every energy-generation technology does use water sometime throughout their entire life-cycle. For example, during the photovoltaic life-cycle, water is used for cleaning silicon wafers and glass substrates, and preparing chemical solutions. In addition, a significant amount of the electricity used to purify silicon and other semiconductor materials is generated by thermoelectric power plants that rely on a water-cooling system. Conversely, as well as using water during their operation, such plants need water both directly and indirectly during fuel acquisition, plant construction, and disposal stages. In an early study, Gleick reviewed water requirements during the life cycles of electricity-generation technologies, i.e., mining, fuel preparation, and construction, operation, and the maintenance of power plant [4]; this analysis was limited to consumptive water use. Recently, Sovacool and Sovacool evaluated the life-cycle water use of U.S. thermoelectric power plants that encompassed both withdrawal and consumption [5]. Neither study, however, evaluated the parameters of upstream water usage associated with energy and material inputs to the life cycle of electricity-generation technologies.

In this paper, we evaluate the life-cycle water usages of conventional and new electricity-generation technologies, including those in a demonstration stage, i.e., coal gasification with carbon sequestration. We consider both upstream (indirect) and on-site (direct) usages in our assessment to encompass completely the water used in the entire supply chain for electricity generation. Then, we compare the life-cycle water withdrawal factors across electricity-generation options, followed by a discussion on policy implications.

2. Scope of the analysis

In general, life cycles of thermoelectric power, including the biomass cycle, consist of the acquisition of fuel, its preparation, construction of the plant and equipment, device/product manufacturing, power generation, and fuel disposal stages, as depicted in Fig. 1. Renewable cycles do not entail the front two stages. Fuel disposal particularly is important for the nuclear-fuel cycle, although its environmental impacts are not characterized fully, as disposal has not yet been implemented. In this study we also review, estimate, and compare the life-cycle water factors of renewable electricity-generation options, i.e., solar, wind, biomass, and hydroelectric, as well as the conventional thermoelectric fuel cycles, viz., coal, natural gas, oil, hydroelectric, and nuclear.

We evaluated two aspects of water usage, withdrawal and consumption, for the aforementioned fuel cycles. According to the US Geological Survey, "withdrawal" is defined as the amount of water removed from the ground or diverted from a water source for use, while "consumption" refers to the amount of water that is evaporated, transpired, incorporated into products or crops, or otherwise removed from the immediate water environment [6]. Our data sources include academic literature, government agency reports, and industrial operation reports. We used the Ecoinvent database to derive values for the water withdrawal embedded in materials and energy (i.e., upstream water usage). We determined water consumptions only for on-site, direct usages; upstream, indirect water consumption data were unavailable.

We assumed, in calculating "upstream" water usages, that water withdrawal by a hydroelectric power plant is zero [7]. According to the U.S. Geological Survey, hydroelectric power generation does not withdraw water or divert water flow; it is categorized as "instream" water use [2]. Besides, the water stored is available for multiple purposes, including irrigation, recreation, and flood control [8], and generally does not affect water supply for other purposes. The effect of this assumption will be evaluated by a sensitivity analysis. In addition, only freshwater usages are evaluated since the availability of seawater is unlimited.

3. Water usage during fuel acquisition, preparation, and device/plant construction

3.1. Thermoelectric fuel cycles

The fuel cycles of conventional thermoelectric power, i.e., coal, nuclear, natural gas, and oil, begin by extracting fuel from the earth and processing them into a form suitable for combustion, so-called beneficiation. Then, during the plant's operation, the fuel is burned to operate the turbine or steam generators. Later parts of the fuel cycles include decommissioning the power plant, and disposing of the spent fuel.

We evaluated water usages during the acquisition and preparation of the fuel. For the coal-fuel cycle, coal is mined, cleaned, and transported to a power plant during these so-called front stages. Here, water is employed directly primarily for cleaning, while indirect, upstream water usages are associated with the inputs of electricity, fuel, and construction materials. The natural gas- and oil-fuel cycles also encompass stages of extracting the fuel from the earth, followed by the conditioning or refining process. The route of the nuclear-fuel cycle differs from that of the fossil-fuel cycles in adopting sophisticated, energy-intensive fuel preparation processes. Starting from mining uranium, the cycle passes to its completion through converting, enriching, and fabricating the fuel. Tables 1 and 2 give the estimates of water withdrawal and consumption, respectively, for these stages. For upstream water withdrawal, we adapted the data on energy- and material-inputs from the U.S. DOE's characterizations of fuel cycles [9], while the water withdrawal factors of those inputs are taken from the Ecoinvent database [10], whose estimate of this factor for spent nuclear-fuels is based on the proposed Yucca Mountain repository. Overall, there are great variations in the information,

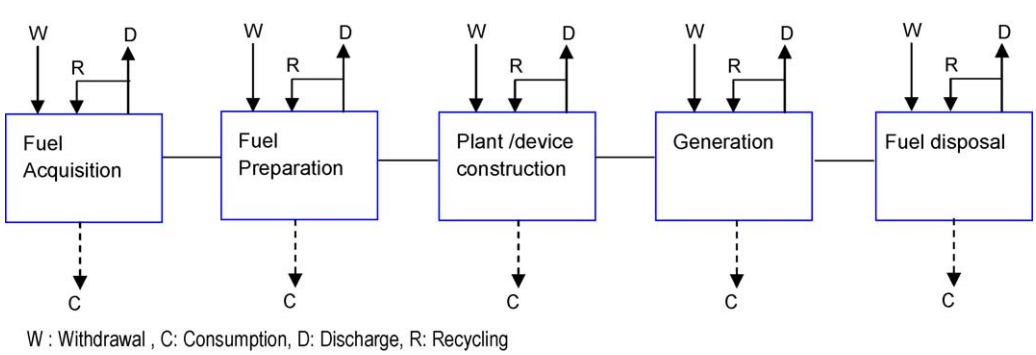

Fig. 1. Fuel cycle water flows in generating electricity.

Table 1
Water withdrawals, expressed as liters per MWh electricity, L/MWh, during fuel acquisition and preparation for thermoelectric fuel cycles in the United States.

Fuel cycle	Stage	Withdrawal – on-site (L/MWh)	Withdrawal – upstream (L/MWh)	Reference
Coal	Eastern underground mining[a]	190	507	[9]
	Eastern surface mining[b]	38[c]	148	[9]
	Western surface mining[d]	N/A	11	[9]
	US coal mining	106	N/A	[12,13]
	Beneficiation (Material fractionation)	>45	53	[9]
	Transportation – train	N/A	26-38	[9]
	Transportation – slurry pipeline	450	3100	[9]
	Construction – coal-power plant	N/A	11-45	[9]
Nuclear	Uranium mining	38	15	[9]
	Milling	19	68	[9]
	Conversion	15	8	[9]
	Enrichment – diffusion	79	1150	[9]
	Enrichment – centrifuge	8	102	[9]
	Fuel fabrication	3	0.4	[9]
	Power plant construction – PWR	N/A	19	[9]
	Power plant construction – BWR	N/A	38	[9]
	Spent fuel disposal	N/A	19	[14]
Natural gas	Extraction – on shore	130	300	[9]
	Extraction – off shore	0.8	0.4	[9]
	Purification	64	N/A	[9]
	Pipeline transportation	1.5	38	[9]
	Storage – underground	N/A	15	[9]
	Power plant environmental control	N/A	890	[9]

PWR = pressurized water reactor; BWR = boiling water reactor; N/A = not available.
[a] Including coal washing.
[b] Seam thickness = 0.9 m.
[c] Washing only.
[d] Seam thickness = 7 m.

depending on sources of the data, and conditions, such as heating value and seam thickness of the fuel. For example, the water withdrawal requirement for the Western surface coal mining is assessed for a thick seam, i.e., 7 m, whereas that for the Eastern surface coal mining is based on a thin seam, 0.9 m, which reflects the geological difference between the two regions [9]. This leads to a higher value for fuel- and materials-consumption per unit of coal mined, hence, a larger upstream water factor for the Eastern than the Western surface mining as a larger area must be excavated in the former case [11]. Underground coal mining requires more on-site water withdrawal than does surface mining mainly due to the large amount of water sprayed inside the mine to control dust; it accounts for ~70% of the total on-site withdrawal [9]. Water used for washing the coal makes up the rest. The upstream water withdrawal for underground mining is also higher than that for surface mining mainly due to extensive use of mine equipment for constructing the shaft, excavating the coal, and for operating ventilation fans [9]. The US's average withdrawal factors are assessed by a top-down approach. The US's total water withdrawal for coal mining was 180 million m^3 in 1983 [12]. Normalizing this value by the total coal mined in that year, i.e., 709 million metric tons, and applying an electricity-generation efficiency of 35% and coal-heating value of 25 MJ/kg, the water withdrawal corresponds to 106 L/MWh [13]. For the nuclear-fuel cycle, upstream water withdrawals are significant for uranium enrichment especially by gaseous diffusion, the most energy-intensive stage.

Table 2
Water consumptions during fuel acquisition and preparation of thermoelectric fuel cycles in the US (L/MWh). Upstream water consumptions are not included.

Fuel cycle	Stage	Consumption (L/MWh)	Reference
Coal	Surface mining	11–53	[9,12]
	Underground mining	30–200	[9,12]
	Washing	30–64	[15]
	Beneficiation	42–45	[9,12]
	Transportation – slurry pipeline	420–870	[9,12]
Nuclear	Surface uranium mining	200	[9]
	Underground uranium mining	4	[12]
	Milling	83–100	[12]
	Conversion	42	[12]
	Enrichment – diffusion	45–130	[9,12]
	Enrichment – centrifuge	4–19	[9,12]
	Fabrication	11	[12]
Natural gas	Extraction – on shore	NG	[12]
	Extraction – off shore	NG	[12]
	Purification	57	[12]
	Pipeline transportation	30	[12]

NG = negligible.

3.2. Renewable fuel cycles

Water usages during the fuel cycles of renewable technologies mostly are upstream ones related to manufacturing a device or constructing a power plant, except for the biomass fuel cycle that requires a significant amount of irrigation water. Tables 3–5 give the water use factors for the options of renewable electricity generation in the United States during the front stages, that is, the counterpart of the fuel mining and preparation stages for thermoelectric cycles. Water consumption data for the stages of renewable technologies are undetermined, due to lack of information on the extent of water recycling in these facilities.

The three commonest types of PVs are evaluated: Multi-crystalline silicon (multi-Si), mono-crystalline silicon (mono-Si), and, thin-film cadmium telluride (CdTe). On-site water usages include those for cleaning and cooling wafers, cells, and modules. Overall, the silicon-based PVs require more water than thin-film CdTe both directly and indirectly mainly due to the former's large usage of high-purity silicon. The direct, on-site water withdrawals of multi- and mono-Si PVs (i.e., ~200 L/MWh) mostly are related to the cooling water used when fabricating the cells, such as contact forming and edge isolation. For indirect, upstream water withdrawal, producing cast-silicon and growing single crystals accounts for the largest amount, i.e., 75% and 76%, respectively, of the total for multi- and mono-Si. Since thin-film PV requires

Table 3
Water withdrawal factors of PV technologies, in liters per MWh electricity, for manufacturing the devices, and building the power plants (insolation = 1800 kWh/m^2/year; lifetime = 30 years; performance ratio = 0.8).

Type	On-site (L/MWh)	Upstream (L/MWh)	Note	Reference
Multi-Si	200	1470	Efficiency = 13.2%	[16]
Mono-Si	190	1530	Efficiency = 14%	[16]
Frame	N/A	64	Based on multi-Si PV	[16]
CdTe	0.8	575	Efficiency = 10.9%	[17]
BOS	1.5	210	Based on ground-mount multi-Si PV	[18]

Table 4
Water withdrawal factors of the wind-fuel cycle during manufacturing the devices and building the plant.

Type	Upstream (L/MWh)	Capacity factor	Reference
Off shore, Denmark	230	0.29	[19]
On land, Denmark	170	0.25	[19]
Off shore, Denmark	170	0.46	[20]
On shore, Denmark	320	0.32	[20]
On land, Italy	250	0.19	[21]
On shore, Spain	210	0.23	[22]

much less PV material compared with Si PVs (~25 g versus ~1 kg/m^2), water usage is much lower (Table 3).

For wind power, we evaluated the life-cycle inventory data from European wind farms. We note that no amounts are included for, direct on-site water withdrawals when manufacturing the turbines and constructing the wind farms. Offshore wind farms require additional materials for their foundation and cables, but generate more electricity than do the on-land or onshore wind farms; this is shown by their higher capacity factor (Table 4). The usages of steel, iron, and glass fiber for wind turbines are the most significant sources of indirect, upstream water withdrawal.

Energy crops are converted to various forms of energy carrier, including biodiesel, ethanol, methanol, hydrogen, and electricity. For converting crops to electricity, the biomass is either burned to generate steam for the steam turbine, or gasified for a gas turbine. The former scenario generates electricity at a 20–25% of biomass-to-electricity conversion efficiency while for gas, efficiency is 40–45% [29]. The on-site water demand of growing crops often is measured as 'evapotranspiration' that includes the loss of water from the soil and the plant through evaporation and transpiration, correspondingly. Losses from evapotranspiration must be replenished by a combination of precipitation and irrigation to sustain crop growth. Here we evaluate only irrigated water to account for the anthropogenic portion of water supply. As shown in Table 5, the factors of both water withdrawal and consumption for biomass are highly variable, depending on agricultural conditions such as irrigation type, crop species, and precipitation, along with power-generation technologies. Analyzing a hypothetical biomass-to-electricity system that achieves a high yield, especially in the Western United States, Klass estimated an irrigation withdrawal of 15,240 m^3/ha, i.e., 121,000 L/GJ of electricity [24]. Contrastingly, Mann and Spath assume that hybrid poplar in the Midwestern states is rain-fed, i.e., no irrigation water is used [23]. The US average withdrawal rate of irrigation water for all crops was 7160 m^3/ha in 2005 [2]. Of the water withdrawn in 1995, on average 61% was consumed for crops, and the rest was returned to water supplies or lost during conveyance [30]. The global average water consumption for growing crops for electricity were documented by Gerbens-Leenes et al. as ranging from 20,000–231,000 L/GJ of electricity. We also list irrigation water uses in liter per GJ of heat energy, for energy crops converted to ethanol and biodiesel, to illustrate the variance across regions, species, and agricultural conditions, as well as to compare across energy types.

For upstream water withdrawal for producing biomass crops, we have accounted for the water usages imbedded in fertilizers, pesticides, herbicides, along with fuel and electricity for cultivation, irrigation, and harvesting. Mann and Spath conducted an LCA of the gasification combined cycle of the hybrid poplar system [23]. Their energy and material inputs are translated into a 52 L/GJ of upstream water withdrawal, i.e., 31 L/GJ from the energy uses to plant, grow, harvest and transport biomass, and 21 GJ from the materials usages for fertilizers, pesticides, and the power plant. A hypothetical system of herbaceous perennials studied by Klass that includes irrigation water, required a higher upstream withdrawal of 310 L/GJ, mainly due to the electricity usage for irrigation, 200 L/GJ, and to the higher fertilizer demand of these perennials compared with hybrid poplar, at 20 L/GJ [24].

Life-cycle inventory data related to plant construction are rare for hydroelectric fuel cycles. We estimated the upstream water withdrawal factor based on the material data from the Glen Canyon hydroelectric plant on the Colorado River [31]. Assuming a 40-year lifetime with an annual production of 5.55 TWh and using the Ecoinvent water factors, the indirect withdrawal corresponds to 80 L/MWh [10,31].

4. Water usage factors of power-plant operation

In thermoelectric power plants, water cools and condenses the steam generated by burning fossil- or nuclear-fuels, and replenishes lost steam generated in the boilers; it also is used for cleaning flue gases. These power plants use fossil fuel or biomass, or fission uranium fuel to turn water into high-pressure steam to operate a turbine generator. The steam subsequently is cooled, condensed in a heat exchanger or condenser through which cooling water flows, and returned to a steam generator. Thermoelectric renewable pathways of electricity generation, such as geothermal and solar-thermal, also require water for cooling and for generating steam. In 2005, the freshwater withdrawal by thermoelectric power plants was 41% of the total US needs [2]. Here, a particular concern is the ecological impact on the fish impinged in cooling water intake. Furthermore, as thermoelectric power plants increasingly switch to systems that recirculate cooling water withdrawal will decrease, but consumption, which currently accounts for 3% of the US total water consumption, will escalate [3,6].

4.1. Thermoelectric power plants

The majority of water usage in thermoelectric power plants is employed for cooling and condensing the steam generated in the boilers. The cooling systems for coal-power plants include (a) a once-through system, (b) a cooling pond, (c) a wet tower, and, (d) a dry cooling tower. In the once-through or open-cycle system, water is taken from an adjacent source and is returned to the same water body after passing through the heat exchanger to remove excess heat. Whilst such systems are the most energy- and cost-efficient, they require the greatest amount of water withdrawal [3].

Table 5
Water demand, expressed in liters per gigajoules (L/GJ) of biomass/bioenergy production.

Energy type	Biomass	On-site (L/GJ)*	Water use type	Upstream (L/GJ)*	Assumptions	Reference
Electricity	Hybrid Poplar, US	0	W/C	52	Rain-fed; yield = 13.5 t/ha/year; gasification combined cycle with 37.2% efficiency	[23]
Electricity	Herbaceous perennials, Southwestern US, irrigation	121,000	W	310	Yield = 27 t/ha/year; steam power plant with 25% efficiency	[24]
Electricity	Maize, global average	20,000	C	N/A	Total biomass yields are used	[25]
Electricity	Sugar beet, global average	27,000	C	N/A	Total biomass yields are used	[25]
Electricity	Soybean, global average	95,000	C	N/A	Total biomass yields are used	[25]
Electricity	Jatropha, global average	231,000	C	N/A	Total biomass yields are used	[25]
Ethanol	Corn, US	350–12,100	W	N/A	Irrigation + fuel conversion; crop yield = 142 bushel per acre, ethanol yield = 10.2 L per bushel	[26]
Ethanol	Corn, US	270–8600	C	N/A	Irrigation + fuel conversion; crop yield = 142 bushel per acre, ethanol yield =10.2 L per bushel	[26]
Ethanol	Switchgrass, US	50–260	W/C	N/A	Rain-fed; fuel conversion only; yield = 9.0–15.7 dry metric tons per hectare	[26]
Ethanol	Corn, Illinois	505	W	N/A	Corp yield =10.2 t/ha/year; ethanol yield = 9.7 L per bushel	[27]
Ethanol	Corn, Iowa	170	W	N/A	Yield = 9.2 t/ha/year; ethanol yield = 9.7 L per bushel	[27]
Ethanol	Corn, Nebraska	18,700	W	N/A	Yield = 8.8 t/ha/year; ethanol yield = 9.7 L per bushel	[27]
Ethanol	Corn, US	130–56,800	C	N/A		[28]
Ethanol	Sugar beet, global average	35,000	C	N/A	Total biomass yields are used	[25]
Biodiesel	Soybean, global average	217,000	C	N/A	Total biomass yields are used	[25]
Biodiesel	Rapeseed, global average	245,000	C	N/A	Total biomass yields are used	[25]

W: withdrawal; C: consumption; W/C: consumption is equal to withdrawal.
* GJ instead of MWh were used to represent both electrical- and thermal-end-use energy.

The cooling pond uses the surface area of water body to lower the temperature of the heated water from the plant condensers, dissipating heat through atmospheric evaporation, radiation, and conduction. Since water recirculates through the plant's intake, the temperature of the intake water is higher, and thus, efficiency is lower than with the once-through system [32]. Water withdrawal is slightly lower but consumption is higher than in the once-through system.

In the wet cooling recirculating system, the commonest recirculating scheme, warm water is pumped from the steam condenser to cooling towers to dissipate heat to the atmosphere. Some of the warm water evaporates from the cooling tower and

Table 6
Water use factors for thermoelectric power plants.

Power plant	Cooling type	Withdrawal (L/MWh)	Consumption (L/MWh)	Reference
Coal	Once-through, subcritical	103,000	530	[3]
	Once-through, supercritical	85,600	450	[3]
	Once-through	76,000–190,000	1140	[33]
	Once-through	N/A	1210	[12]
	Once-through (fluidized-bed)	N/A	950	[12]
	Cooling pond, subcritical	67,800	3030	[3]
	Cooling pond, supercritical	57,200	242	[3]
	Cooling pond	1100–2300	1000–1900	[33]
	Wet tower, subcritical	2010	1740	[3]
	Wet tower, subcritical	2590	2560	[34]
	Wet tower, subcritical	4430	4430	[36]
	Wet tower, supercritical	2500	1970	[3]
	Wet tower, supercritical	3940	3940	[36]
	Wet tower, supercritical	2270	2240	[34]
	Wet tower	1900–2300	1700–1900	[33]
	Wet tower	N/A	3100	[12]
	Wet tower, eastern	N/A	2800	[9]
	Wet tower, western	N/A	1900	[9]
Nuclear	Once-through	119,000	530	[3]
	Once-through	95,000–230,000	1500	[33]
	Cooling pond	1900–4200	1700–3400	[33]
	Wet tower	4200	2300	[3]
	Wet tower	3000–4200	2800–3400	[33]
	Wet tower (LWR)	N/A	3200	[12]
	Wet tower (HTGR)	N/A	2200	[12]
	Wet tower (PWR)	N/A	3100	[9]
	Wet tower (BWR)	N/A	3400	[9]
Oil/gas-steam	Once-through	85,900	341	[3]
	Once-through	N/A	1100	[12]
	Once-through	N/A	950	[9]
	Cooling pond	29,900	420	[3]
	Wet tower	950	610	[3]
	Wet tower	N/A	3100	[12]
	Wet tower (oil)	N/A	1100	[9]

Table 6 (*Continued*)

Power plant	Cooling type	Withdrawal (L/MWh)	Consumption (L/MWh)	Reference
NGCC	Once-through	34,100	76	[3]
	Once-through	28,000–76,000	380	[33]
	Cooling pond	22,500	910	[3]
	Wet tower	568	490	[3]
	Wet tower	1030	1020	[34]
	Wet tower[a]	1900	1900	[36]
	Wet tower	870	680	[33]
	Dry cooling	15	15	[3]
IGCC	Wet tower	855	655	[3]
	Wet tower	1420–1760	1360–1420	[34]
	Wet tower[a]	2600–3100	2570–3140	[36]
	Wet tower	950	680	[33]

NGCC = natural gas combined cycle; IGCC = integrated gasification combined cycle; LWR = light water reactor; HTGR = high temperature gas-cooled reactor; PWR = pressurized water ractor; BWR = boiling water reactor.

[a] We assumed that all process blowdown streams are recycled to the cooling tower.

Table 7
Water use factors for fossil power plants with carbon capture with 90% capture efficiency (the numbers in parentheses denote the values without carbon capture).

Power plant	Cooling type	Withdrawal (L/MWh)	Consumption (L/MWh)	Reference
Coal	Wet tower, subcritical	5600 (2610)	5030 (2570)	[34]
	Wet tower, supercritical	4880 (2270)	4350 (2230)	[34]
	Wet tower, retrofitted plant	36,000	1300	[37]
IGCC	Wet tower	2200–2500 (1400–1800)	1800–2000 (1360–1440)	[34]
NGCC	Wet tower	2100 (1000)	1900 (1000)	[34]

IGCC = integrated gasification combined cycle; NGCC = natural gas combined cycle.

the rest returns to the condenser; these losses continually are replaced from a local body of water. In addition, some must be discharged to prevent the buildup of minerals and sediment caused by evaporation. Due to evaporative loss and to blowdown (opening a valve in the boiler to eject sediment), the wet tower system consumes significantly (1.5–6.5 times) more water than the once-through system [3].

In the dry cooling tower system, hot water passes through heat exchangers where heat is transmitted to the ambient air; hence, no cooling water is required. However, this system incurs very high capital costs, and loses efficiency during hot weather, and high winds [32].

Table 6 summarizes the published data on water withdrawal and consumption factors for thermoelectric power plants. Once-

Table 8
Water use for renewable power plants.

	Type	Withdrawal (L/MWh)	Consumption (L/MWh)	Condition	Reference
Geothermal	Dry system	7570	5300		[8]
	Dry system[a]	6800	6800		[12]
	Hot water system	15,000	15,000		[12]
	Hot water system	44,700	2300–6800		[42]
CSP	Tower	2900	2900		[43]
	Tower	3200	3200	2700 kWh/m^2/year (DNI)	[42]
	Tower, wet cooling	3100	3100	SEGS 6/7	[44]
	Parabolic trough, wet cooling	3700	3700	250 W/m^2 (DNI), hypothetical	[45]
	Parabolic trough, dry cooling	300	300	250 W/m^2 (DNI), hypothetical	[45]
	Parabolic trough, wet cooling	3100	3100	SEGS 6/7	[44]
	Parabolic trough, wet cooling	3100–3800	3100–3800	SEGS 3–7, 1995, actual	[46]
	Trough	2100	2100	2891 kWh/m^2/year (DNI)	[42]
	Dish stirling	15	15	Cleaning	[43]
PV		0	0		[47]
		15	15	Cleaning	[43]
CPV		0	0		[48]
		15	15	Cleaning	[43]
Wind		0	0		[8]
		4	4	Cleaning	[43]
Hydro		0	17,000	US average	[12]
		0	38–210,000	California	[12]
		0	5300	California, median	[12]
Biomass	Steam plant	1800	1800		[49]
	Biogas-steam, wet cooling	2100	1700		[49]
	Biogas-steam, dry cooling	150	0		[49]

CSP: Concentrating Solar Power; PV: Photovoltaic; CPV: Concentrated Photovoltaic; SEGS: Solar Electric Generation Station; DNI: Direct Normal Irradiation.

[a] No water is required from outside if the geothermal steam condensate is used for cooling.

through cooling, the most efficient system, draws the largest amount of water per MWh of electricity. Coal-burning plants equipped with supercritical boilers, accounting for 27% of the current US coal-power plants, require less water than those with subcritical boilers [3]. The US light-water nuclear reactors require more water to produce the same amount of electricity than other fossil plants with an equivalent cooling system, as they are thermodynamically less efficient than the latter [33]. The high efficiencies of natural gas combined cycles (NGCC) reduce water use.

Carbon-capture technologies will escalate the amount of water used considerably [3,34]. The studies we reviewed assume that CO_2 is captured through absorption with amine solvents that are the commonest ones used in modeling for advanced coal-power plants [35]. In this technology, cooling water first suppresses the temperature of the exiting flue gas from the flue gas desulfurization system. Then, as the CO_2 is compressed, intercoolers lower the temperature of the CO_2 fluid by dispelling the heat generated during compression. More water is used to cool the solvent and remove heat from auxiliary electric loads [3]. Those plants equipped with a scrubber for controlling SO_2 control require additional water. Furthermore, the additional power used to capture and sequester CO_2 lowers the plant's output, thus raising the amount of water used per MWh energy generated. Table 7 compares the additional water required for power plants with carbon capture to those without. However, these perspective analyses are unverified as carbon-capture technologies are not yet in service.

4.2. Renewable energy power plants

Renewable energy power plants utilize either the thermal energy originating from renewable sources, i.e., geothermal-, solar-thermal-, and biomass-power plants, or directly generate electricity from renewable sources, i.e., hydroelectric-, photovoltaic-, and wind-power plants. As the former pathways involve a steam turbine or boiler, water use is in a similar range as that for steam-based fossil-fuel plants. On the other hand, at hydroelectric power plants a large volume of water is evaporated from the surface of artificial reserviors, but wind- and photovoltaic-power plants hardly need water during their operation. Table 8 lists the water factors of renewable energy technologies for electricity generation.

Geothermal plants fall into vapor-dominated dry-steam systems, and liquid-dominated hot water ones. In the former, where steam from an underground well directly runs a steam turbine, drawing extra water is unnecessary if the steam condenstate is used for cooling. In the latter systems, a hot, pressurized liquid or mix of liquid and vapor is brought to the surface, where it releases steam as pressure drops to the saturation value. Here, the geothermal condensate can be used to partially cool the system [4,38]. Geothermal power plants use more water than conventional steam plants because they run at only 8–15% heat-electricity conversion efficiency. Similarly, the water use of concentrator solar power is greater than that of conventional fossil plants because of lower net efficiency of the steam cycle partially due to the need to pump the heat-transfer fluid [39]. An exception is the dish-stirling system where the concentrated heat is directly converted to electricity by a heat engine that operates at a high temperature, eliminating the need for cooling water. Although hydroelectric power plants draw a significant amount of water, the net drawing often is considered zero by convention [7]. The amount of water consumption from hydroelectric power plants is difficult to measure; the few estimates available exhibit a large variance [40,41].

5. Comparison of life-cycle water factors

Here, we use the data presented in the previous sections to estimate the total life-cycle water factors and compare them across fuel cycles. We consider only water withdrawals for this comparison because there is minimal information on upstream consumptive water usages. For the coal-fuel cycle, the US average water withdrawals are estimated for mining, beneficiation, and plant construction, based on the sources listed in Table 1, along with statistics on the method of coal production, i.e., surface or underground [13]. For estimates of water withdrawal during the operational stage, we use the most recent DOE study [3], to assess the averages for each cooling type, i.e., once-through, wet-recirculation, and cooling pond. For the nuclear-fuel cycle, we take the figures in Table 1 for both on-site and upstream water withdrawals. The calculations of the weighted US average water withdrawals are based on our own assumptions and government statistics: (1) It is assumed that 50% of uranium is mined at surface, and 50% underground; (2) from the US Energy Information Administration's statistics [50], 50% of US uranium is enriched by centrifuge, and 50% by diffusion; and (3) this same source states that PWRs account for 60% of the US's nuclear-power-plant capacity and BWRs constitute for 40%. We use reference [3] for the operation stage of once-through- and wet tower-cooling systems, but the figure from reference [33] is used for cooling tower systems. Similarly, estimates of the US average water withdrawal for the natural gas combined fuel cycle is based on the figures in Table 1 and US statistics; the latter finds that around 20% of natural gas is produced by offshore extraction [51]. Ref. [3] is used for the operational stage of this fuel cycle. For renewable electricity options, figures in Tables 3–5, and 8 were used. We selected Refs. [23,24] to illustrate two contrasting cases for biomass: one requires irrigation in the arid Southwestern US, and the other, in Midwestern US, does not. A comprehensive, representative figure for the biomass-to-electricity scheme is unavailable due to lack of large-scale biomass-based power plants together with variable farming conditions (e.g., precipitation, nutrient, and soil conditions) in different agricultural areas.

Fig. 2 compares water withdrawal across fuel cycles of electricity-generation options based on US data except the wind

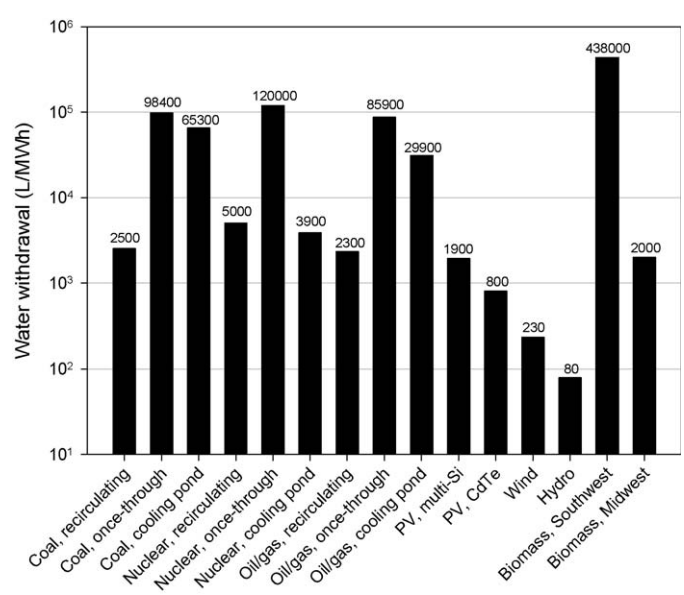

Fig. 2. Comparison of water withdrawal across fuel cycles. US data are used, except for the wind cycle, a Danish case. For PV, the US average insolation of 1800 kWh/m^2/yr and performance ratio of 0.8 is used. The value for the wind cycle is for offshore installation with a capacity factor of 0.29.

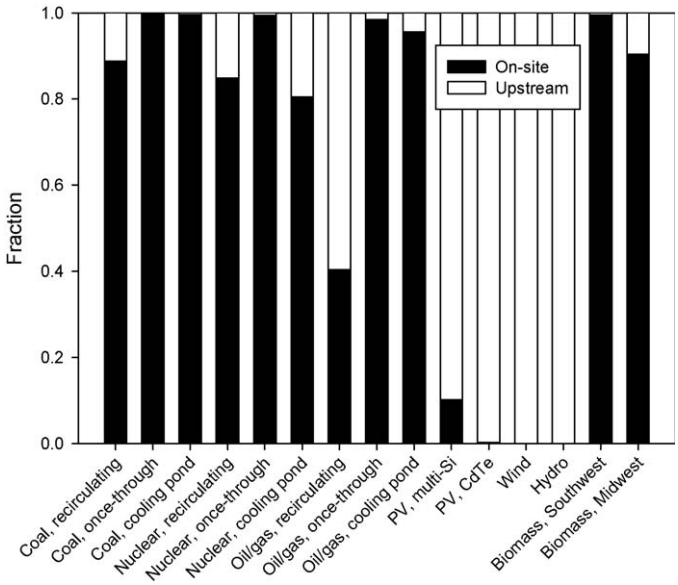

Fig. 3. Breakdown of water withdrawals based on the water-use stage. US data are used, except for the wind cycle, a Danish case. For PV, the US average insolation of 1800 kWh/m^2 and performance ratio of 0.8 is used. The value for the wind cycle is for offshore installation with a capacity factor of 0.29.

cycle that uses information from Denmark. For thermoelectric fuel cycles, the life-cycle water withdrawal ties closely to the operational cooling type since on-site cooling water use dominates the life-cycle water withdrawal, except for the dry cooling method (Fig. 3). The electricity generated through recirculating wet tower, once-through, and cooling-pond systems, respectively, withdraw 1000–5000, 35,000–120,000, and 4000–65,000 L/MWh. The breakdown of cooling type in the United States (Table 9) along with the life-cycle water withdrawals in Fig. 2 gives the average of each thermoelectric cycle, correspondingly, 48,000, 48,700, and 56,200 L/MWh for the coal, nuclear, and oil/gas cycles. The hydro-fuel cycle requires an upstream water withdrawal of 80 L/MWh, and NGCC withdraws 4000 L/MWh. Using the US grid mix [13], i.e., coal-49.8%, nuclear-20.3%, oil/gas-18.2%, combined cycle-2.9%, hydro-6.2%, and other-2.5%, the US average life-cycle water withdrawal corresponds to 44,100 L/MWh, of which 43,800 L/MWh is from on-site cooling water usage. On the other hand, these withdrawals for the PV and wind-fuel cycles are much lower than those of the thermoelectric cycles. The PV fuel cycle withdraws only 800–2000 L/MWh under the US average insolation, 1800 kWh/m^2/year, all of which are required for producing the device. The withdrawal for the life cycle of wind turbines is even lower, 230 L/MWh. We note that the life-cycle inventory data we reviewed for the wind cycle generally are less detailed than those for the PV cycle, warranting more detailed investigation of the former.

Water is withdrawn in different stages of the life cycle of thermoelectric and other fuel cycles. For the former, the withdrawal mostly is used in operation, i.e., cooling and condensing the high-pressure steam that drives turbines with an exception of dry-cooled power plants. In contrast, water withdrawn in the life cycle of PV-, wind-, and hydro-fuel cycles is used in acquiring and processing the materials and for the energy needed to produce electricity-generating devices and to construct power stations, i.e., upstream use (Fig. 3). However, upstream withdrawals for the biomass cycle, and constructing devices and facilities are small compared to those used in irrigation and in steam power plants.

Table 9
Breakdown (%) of cooling type for the US thermoelectric power plants [3].

Power plant	Wet-recirculating	Once-through	Dry	Cooling pond
Coal	48	39.1	0.2	12.7
Nuclear	43.6	38.1	0	18.3
Oil/gas	23.8	59.2	0	17.1
Combined cycle	30.8	8.6	59	1.7
Total	41.9	42.7	0.9	14.5

6. Discussion

Water is used in various stages of the life cycle of electricity-generation technologies, that is, fuel acquisition, fuel treatment, plant construction, operation, decommission, and disposal. Water is also used upstream for energy and material inputs into each stage; although we attempted to quantify the latter, there are few data on upstream water use, and databases often list only water inputs into the process, considering them equal to water withdrawal [52]. A full water accounting, measuring input-, output-, and recycled-water, is needed to accurately estimate consumptive water use, but will be challenging for stages like mining, farming, and plant construction. In addition, the varying quality of life-cycle inventories from different electricity-generation technologies complicated our ability to completely balance our comparisons. For example, the data we used for materials and energy requirements in constructing coal-, nuclear-, and gas-power plants are less detailed than those for constructing a PV power plant, particularly lacking information on energy for material shaping and equipment manufacturing. The water-use data for building thermoelectric power plants construction might have been truncated [9].

Our sensitivity analysis indicates that accounting for life-cycle water usage generates noticeably different figures if the amount of damned or flowing water to drive a turbine is regarded as water withdrawal. Although recent peer-reviewed studies and the USGS identify such uses as instream ones, i.e., they allocate no withdrawal to them [7,30,53]; the Ecoinvent database, and a study comparing water use across fuel cycles allocates a large amount of water to the electricity generated from hydroelectric power [10,54]. We tested the effect of this atypical allocation scenario on the life-cycle water withdrawal from US statistics. The US total water (instream) use in hydropower was 4.4×10^{15} L in 1995; this value, divided by the total US electricity generated by hydropower that year, 3.1×10^{8} MWh, corresponds to 14,000 L/

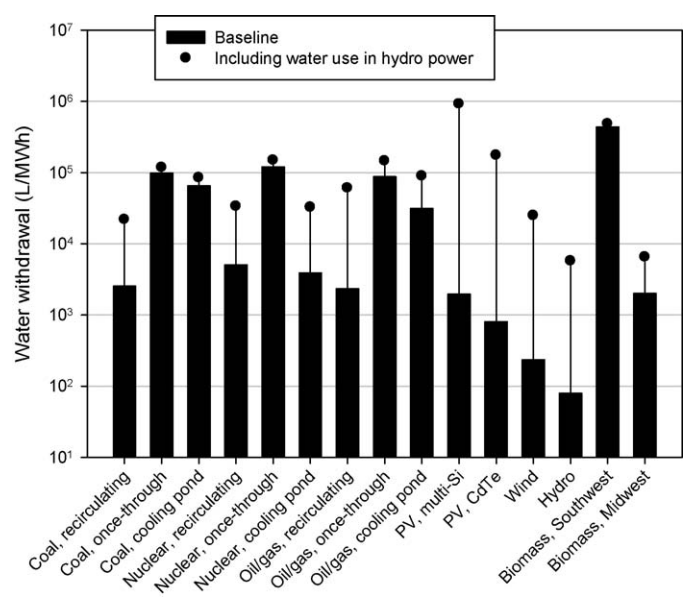

Fig. 4. Comparison of water withdrawal across fuel cycles with hydropower water usages accounted for as withdrawal.

GWh of water. We represented, by line extensions on the bars of Fig. 4, the life-cycle water withdrawal employing this accounting method. Overall, the total withdrawal then increased dramatically to levels more than two orders-of-magnitude higher than the baseline method for the PV- and wind-fuel cycles because of the escalated upstream water withdrawn in hydroelectric power plants. Accordingly, with this accounting method, we draw a completely different conclusion. This test emphasizes the importance of selecting an adequate accounting method in evaluating the life-cycle water uses, and illustrates how critical it is to employ a transparent, balanced approach in a comparative analysis.

The present study sheds light on the implications of water use for future energy demand and supply. While US national level projections on thermoelectric power capacity and cooling water supply for the next several decades indicate a low risk of water availability for the electricity sector, the regional- and state-level assessments pose a high risk of water shortage [3], especially for the arid Southwestern US where high population growth is expected. A plausible option to avoid risk is adopting dry cooling in thermoelectric power plants that requires a minimal amount of water. However, dry cooling entails a decline in efficiency due to the parasitic energy loss required for cooling operation, i.e., fan blowing. Dry cooling currently is installed only in relatively simple-design, small-scale coal- and combined cycle-power plants. The Southwestern US also receives abundant solar insolation, and the desert areas are perfect for locating utility-scale solar farms. Thus, not only does PV generate carbon-free electricity, our analysis demonstrated that it would save water use in this region. Significant penetration of renewable energy options, like PV and wind, requires energy storages, which would enable base-load power generation. Zweibel et al. [55,56] recently proposed "A Solar Grand Plan" that delineates employing a large-scale renewable technologies for electricity generation, including energy-storage options. Together with a revolutionary, massive deployment of photovoltaic-, solar concentrator-, wind-, and geothermal-plants, the study highlighted the Compressed Air Energy Storage (CAES) system as a promising storage option. It stores excess daytime energy as compressed air in underground caverns and feeds the compressed air to gas-turbine generator, viz., a hybrid gas and renewable energy generation. According to the proposed plan, solar power (PV and CSP) could provide 69% and 35% of the US electricity and energy-needs, correspondingly by 2050. The comparative analysis of the present study (Fig. 3) shows that such a plan, a combination of renewable energy options with CAES would significantly reduce the amount of water withdrawal.

7. Conclusion

We reviewed and evaluated the life-cycle water use factors per unit electricity generated across thermoelectric- and renewable-technology options in the United States. These factors can be used for further region-specific analyses as energy technology choice for a region is often constrained by the local availability of natural resources. PV- and wind-technologies in addition to providing clean, abundant energy, they can also prevent a foreseeable water-shortage crisis at local or regional levels, related to electricity supply. More investigation is warranted on the water use of very large scales of renewable options with energy storage and of carbon capture and sequestration options, as our society moves toward carbon-free economy.

Acknowledgments

This work was supported by the Solar Technologies Program, US Department of Energy, under Contract DE-AC02-76CH000016 with the US-DOE.

References

[1] GAO. Freshwater supply: states' view of how federal agencies could help them meet the challenges of expected shortages. United States General Accounting Office; 2003, GAO-03-514.
[2] Kenny JF, Barber NL, Hutson SS, Linsey KS, Lovelace JK, Maupin MA. Estimated use of water in the United States in 2005. U.S. Geological Survey; 2009.
[3] NETL. Estimating freshwater needs to meet future thermoelectric generation requirements. National Energy Technology Laboratory; 2009, DOE/NETL-400/2009/1139.
[4] Gleick PH. Water and Energy. Annual Review of Energy and the Environment 1994;19:267–99.
[5] Sovacool BK, Sovacool KE. Preventing national electricity-water crisis areas in the United States. Columbia Journal of Environmental Law 2009;34:333–93.
[6] Hutson SS, Barber NL, Kenny JF, Linsey KS, Lumia DS, Maupin MA. Estimated use of water in the United States in 2000. U.S. Geological Survey; 2004. http://pubs.usgs.gov/circ/2004/circ1268/.
[7] Webber ME. The water intensity of the transitional hydrogen economy. Environmental Research Letters 2007;2:1–7.
[8] DOE. Energy Demands on Water Resources, Report to Congress on the Interdependency of Energy and Water. U.S. Department of Energy; 2006.
[9] DOE. Energy technology characterizations handbook: environmental pollution and control factors. U.S. Department of Energy; 1983.
[10] Ecoinvent Centre. Ecoinvent data v2.0. Swiss Centre for Life Cycle Inventories; 2007.
[11] Fthenakis V, Kim HC. Land use and electricity generation: a life-cycle analysis. Renewable and Sustainable Energy Reviews 2009;13:1465–74.
[12] Gleick PH, editor. Water in crisis: a guide to the world's fresh water resources. New York: Oxford Univ. Press; 1993.
[13] EIA. Annual Energy Review 2008. Energy Information Administration; 2009, DOE/EIA-0384(2008).
[14] Kim HC, Fthenakis VM. Energy use and greenhouse gas emissions from disposal of spent nuclear fuel: an assessment of the Yucca mountain project, unpublished report. Brookhaven National Laboratory; 2005.
[15] NETL. Emerging Issues for Fossil Energy and Water. National Energy Technology Laboratory; 2006, DOE/NETL-2006/1233.
[16] de Wild-Scholten MJ, Alsema EA. Environmental life cycle inventory of crystalline silicon photovoltaic system production: status 2005/2006; 2007. http://www.ecn.nl/publicaties/default.aspx?au=44649.
[17] Fthenakis VM, Kim HC. Energy use and greenhouse gas emissions in the life cycle of CdTe photovoltaics. In: Materials research society symposium proceedings. 2006. p. 895.
[18] Mason JE, Fthenakis VM, Hansen T, Kim HC. Energy payback and life-cycle CO_2 emissions of the BOS in an optimized 3.5 MW PV installation. Progress in Photovoltaics Research and Applications 2006;14:179–90.
[19] Schleisner L. Life cycle assessment of a wind farm and related externalities. Renewable Energy 2000;20:279–88.
[20] Elsam Engineering A/S. Life cycle assessment of offshore and onshore sited wind farms. Vestas; 2004. www.vestas.com.
[21] Ardente F, Beccali M, Cellura M, Brano VL. Energy performances and life cycle assessment of an Italian wind farm. Renewable & Sustainable Energy Reviews 2008;12:200–17.
[22] Martínez E, Sanz F, Pellegrini S, Jiménez E, Blanco J. Life cycle assessment of a multi-megawatt wind turbine. Renewable Energy 2009;34:667–73.
[23] Mann MK, Spath PL. Life cycle assessment of a biomass gasification combined-cycle power system. National Renewable Energy Laboratory; 1997.
[24] Klass DL. Biomass for renewable energy, fuels, and chemicals. Academic Press; 1998.
[25] Gerbens-Leenes W, Hoekstra AY, van der Meer TH. The water footprint of bioenergy. Proceedings of the National Academy of Sciences 2009;106:10219–23.
[26] Wu M, Mintz M, Wang M, Arora S. Consumptive water use in the production of ethanol and petroleum gasoline. Center for Transportation Research, Argonne National Laboratory; 2009, ANL/ESD/09-1.
[27] Mubako S, Lant C. Water resource requirements of corn-based ethanol. Water Resources Research 2008;44. W00A02.
[28] Chiu Y-W, Walseth B, Suh S. Water Embodied in Bioethanol in the United States. Environmental Science & Technology 2009;43:2688–92.
[29] USGS. Estimated use of water in the United States in 2000. US Geological Survey 2004.
[30] Solley WB, Pierce RR, Perlman HA. Estimated use of water in the United States in 1995. US Geological Survey 1998.
[31] Pacca S, Horvath A. Greenhouse gas emissions from building and operating electric power plants in the upper Colorado revier basin. Environmental Science & Technology 2002;36:3194–200.
[32] Najjar KF, Shaw JJ, Adams EE, Jirka GH, Harleman DRF. An Environmental and Economic Comparison of Cooling System Designs for Steam-Electric Power Plants. Massachusetts Institute of Technology; 1979, MIT-EL 79-037.
[33] EPRI. Water & sustainability (volume 3): U.S. water consumption for power production-the next half century. Electric Power Research Institute; 2002.
[34] NETL. Cost and performance baseline for fossil energy plants, volume 1: bituminous coal and natural gas to electricity. National Energy Technology Laboratory; 2007, DOE/NETL-2007/1281.
[35] GCEP. An assessment of carbon capture technology and research opportunities. Global Climate & Energy Project. Stanford University; 2005, http://gcep.stanford.edu.

[36] NETL. Power plant water usage and loss study. The United States Department of Energy, National Energy Technology Laboratory; 2005.
[37] NETL. Carbon dioxide capture from existing coal-fired power plants. National Energy Technology Laboratory; 2006, DOE/NETL-401/110907.
[38] DiPippo R. Geothermal energy: electricity generation and environmental impact. Energy Policy 1991;(October):798–807.
[39] NREL. In: Parabolic trough workshop cooling for parabolic trough power plants overview; 2006. NREL/PR-550-40025.
[40] Gleick PH. Environmental consequences of hydroelectric development: the role of facility size and type. Energy 1992;17:735–47.
[41] Torcellini P, Long N, Judkoff R. Consumptive water use for U.S. power production. National Renewable Energy Laboratory; 2003, NREL/TP-550-33905.
[42] EPRI. Renewable energy technology characterizations. Electric Power Research Institute; 1997, TR-109496.
[43] NREL. Fuel from the Sky, Solar Power's Potential for Western Energy Supply. National Renewable Energy Laboratory; 2002, NREL/SR-550-32160.
[44] NREL. Assessment of parabolic trough and power tower solar technology cost and performance forecasts. National Renewable Energy Laboratory; 2003 , NREL/SR-550-34440.
[45] NREL. Nexant parabolic trough solar power plant systems analysis. National Renewable Energy Laboratory; 2006, NREL/SR-550-40163.
[46] Cohen GE, Kearney DW, Kolb GJ. Final report on the operation and maintenance improvement program for concentrating solar power plants. Sandia National Laboratories; 1999, SAND99-1290.
[47] First Solar, Personal Communication. 2009.
[48] NREL. Economic, energy and environmental benefits of concentrating solar power in California. National Renewable Energy Laboratory; 2006, NREL/SR-550-39291.
[49] Berndes G. Bioenergy and water—the implications of large-scale bioenergy production for water use and supply. Global Environmental Change 2002;12:253–71.
[50] EIA. Official energy statistics from the U.S. Government: Nuclear; 2009 [accessed 2009; available from: http://www.eia.doe.gov/fuelnuclear.html].
[51] EIA. Official energy statistics from the U.S. Government: natural gas; 2009 [accessed 2009; available from: http://www.eia.doe.gov/oil_gas/natural_gas/info_glance/natural_gas.html].
[52] Koehler A. Water use in LCA: managing the planet's freshwater resources. International Journal of Life Cycle Assessment 2008;13:451–5.
[53] King CW, Webber ME. The water intensity of the plugged-in automotive economy. Environmental Science &Technology 2008;42:4305–11.
[54] Inhaber H. Water use in renewable and conventional electricity production. Energy Sources 2004;26:309–22.
[55] Zweibel K, Mason J, Fthenakis V. A solar grand plan. Scientific American 2008;(January):64–73.
[56] Fthenakis V, Mason J, Zweibel K. The technical, geographical and economic feasibility for solar energy to supply the energy needs of the United States. Energy Policy 2009;37:387–99.